| |
|---|
| P–9336 |
| S2228 |
| 21359 |

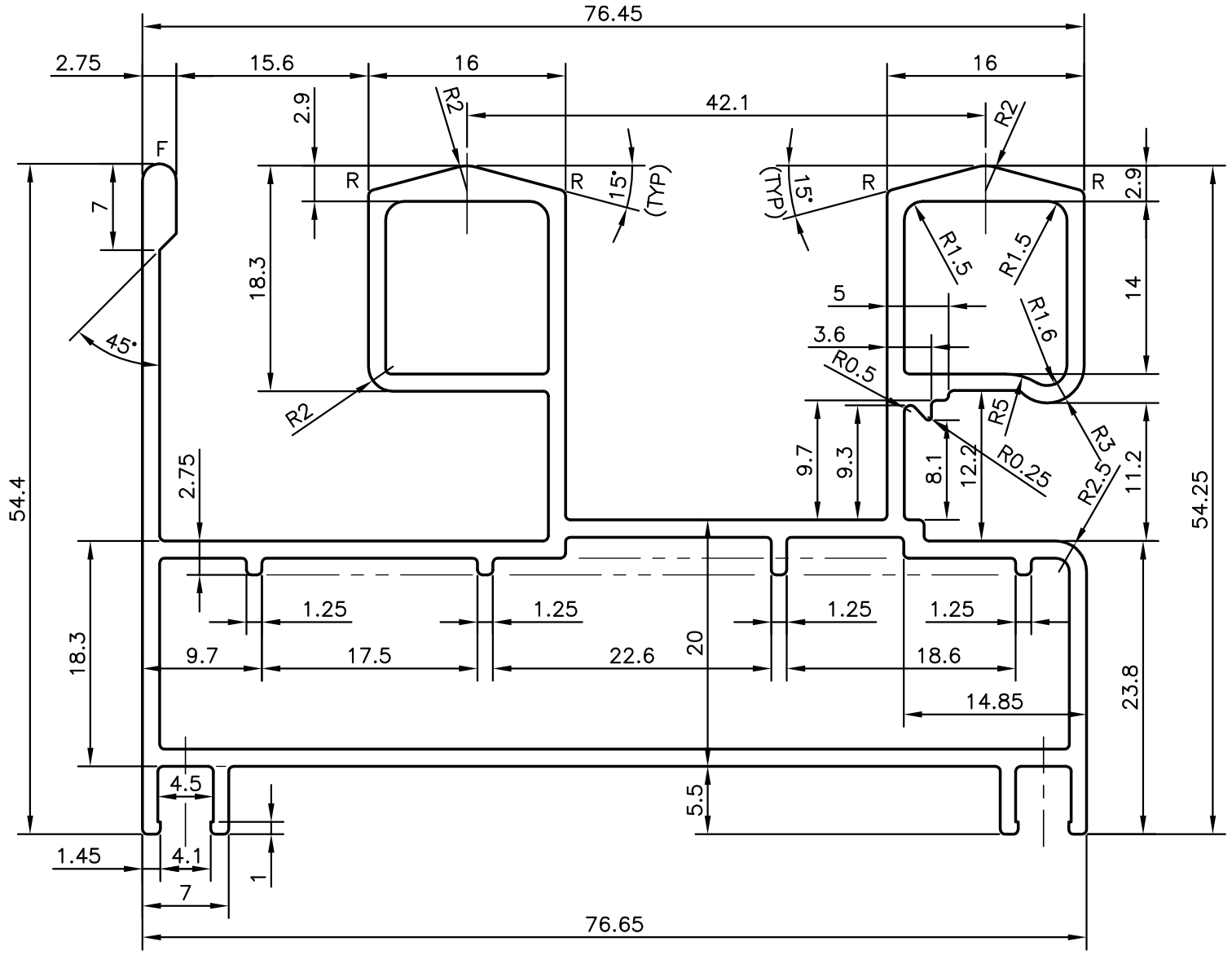


R = R0.5 mm (4 PLACES)
F = FULL RADIUS (1 PLACE)
UNSPECIFIED WALL THICKNESS = 1.40 mm

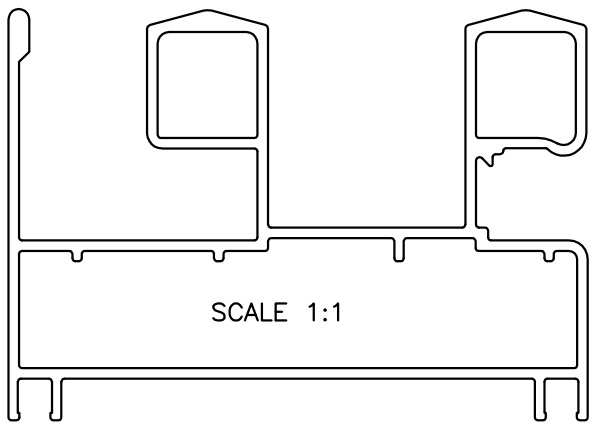


JINDAL
SYMBOL OF QUALITY
AN ISO 9001 COMPANY

**JINDAL ALUMINIUM LTD.**
*BANGALORE–560073 (INDIA)*

1. ALL DIMENSIONS ARE IN mm.
2. ROUND OFF ALL SHARP CORNERS WITH 0.40 mm.
3. TOLERANCES WILL BE AS PER IS:6477–1983 UNLESS OTHERWISE SPECIFIED

| | | NAME | DATE |
|---|---|---|---|
| DRAWN | | PRASANNA.H | 25–06–2009 |
| CHECKED | | | |
| APPROVED | | | |
| SCALE | | | 2:1 |
| AREA $mm^2$ | | | 568.654 |
| PERIMETER mm. | | | 461.683 |
| WEIGHT kg/m | | | 1.535 |

| | | DRAWING No. | SECTION No. |
|---|---|---|---|
| PARTY'S NAME | HATIM GLAZING & CLADDING PVT. LTD., MUMBAI | P–9336 | – |
| PARTY'S DRAWING No. | AS PER SAMPLE | S2228 | S2228 |
| ALLOY & TEMPER | HE9 WP | 21359 | 21359 |
| DESCRIPTION | WINDOW SECTION TWO TRACK BOTTOM | | |