P–9333	
S2226	
21363	

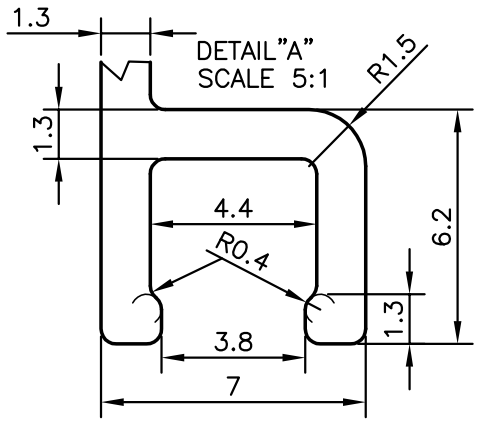

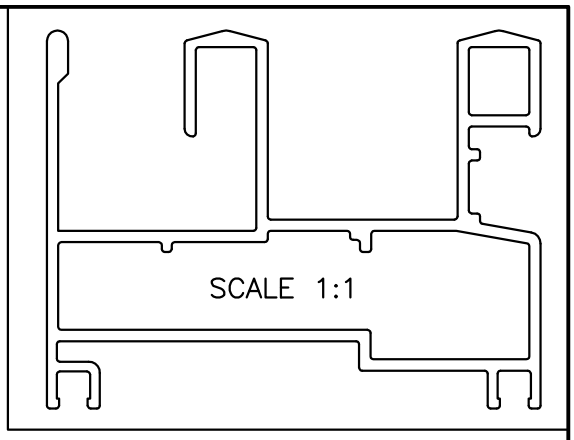

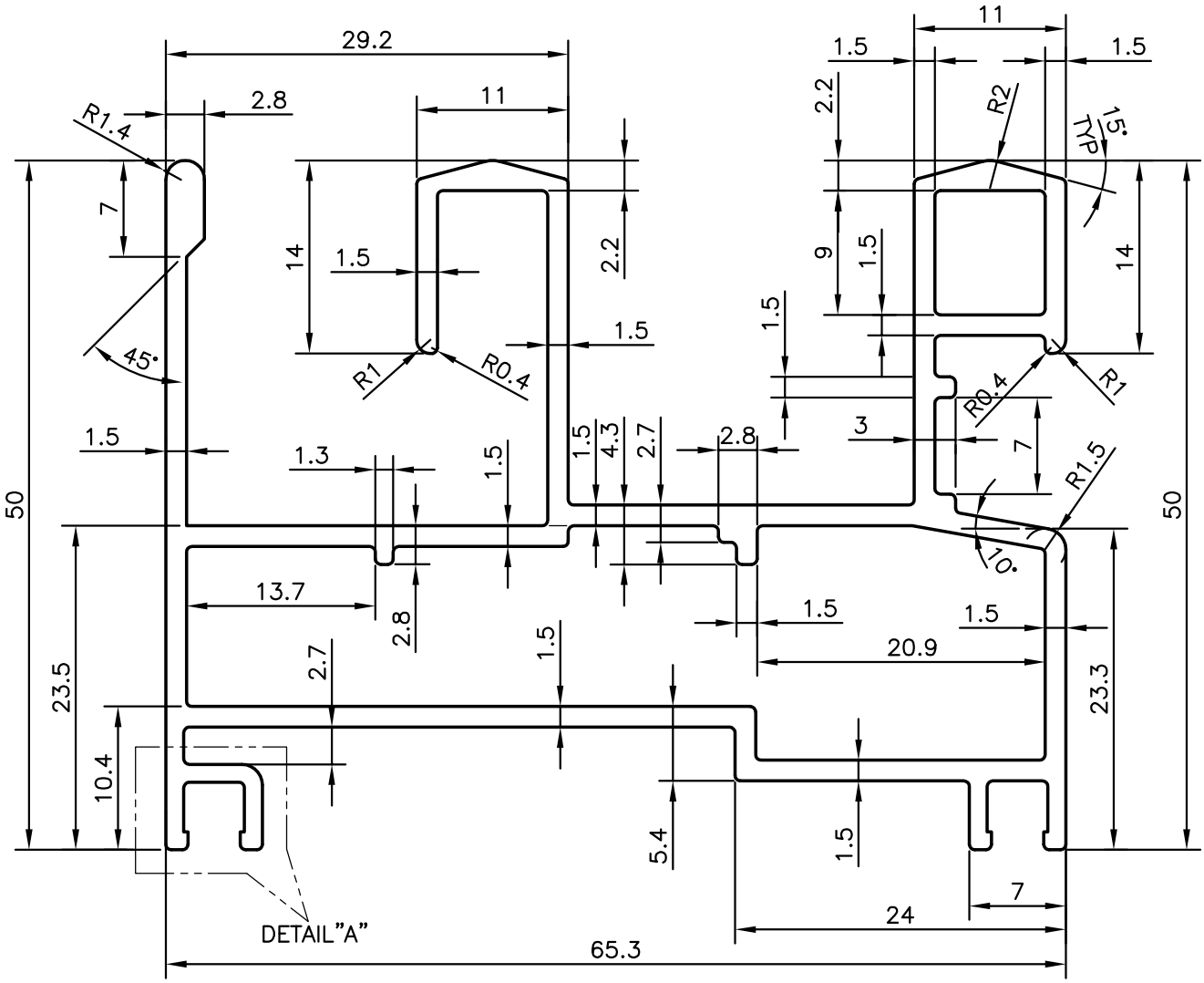

UNSPECIFIED RADIUS WILL BE R0.40m

			NAME	DATE
SYMBOL OF QUALITY AN ISO 9001 COMPANY	*JINDAL ALUMINIUM LTD.* *BANGALORE–560073 (INDIA)*	DRAWN	RAGHAVENDRA	24–06–2009
		CHECKED		
		APPROVED		

1. ALL DIMENSIONS ARE IN mm.
2. ROUND OFF ALL SHARP CORNERS WITH 0.40 mm.
3. TOLERANCES WILL BE AS PER IS:6477–1983UNLESS OTHERWISE SPECIFIED

SCALE	2:1
AREA mm^2	491.812
PERIMETER mm.	438.789
WEIGHT kg/m	1.328

PARTY'S NAME	HATIM GLAZING & CLADDING PVT. LTD., MUMBAI
PARTY'S DRAWING No.	AS PER SAMPLE
ALLOY & TEMPER	HE9 WP
DESCRIPTION	WINDOW SECTION

DRAWING No.	SECTION No.
P–9333	–
S2226	S2226
21363	21363