P-9491-1
S2290
21366

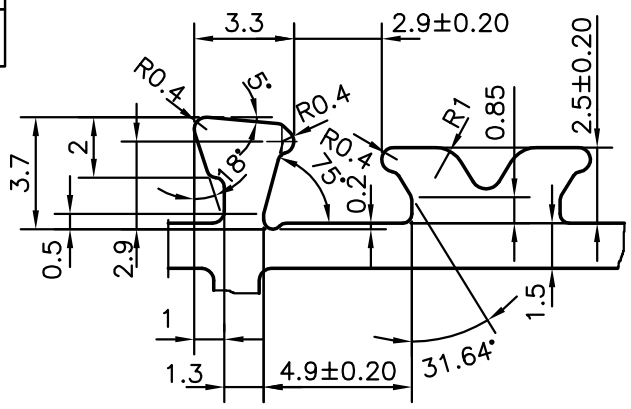

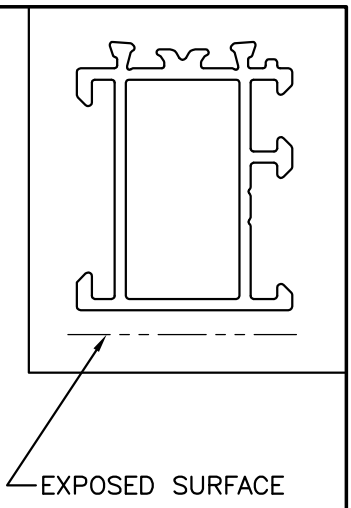

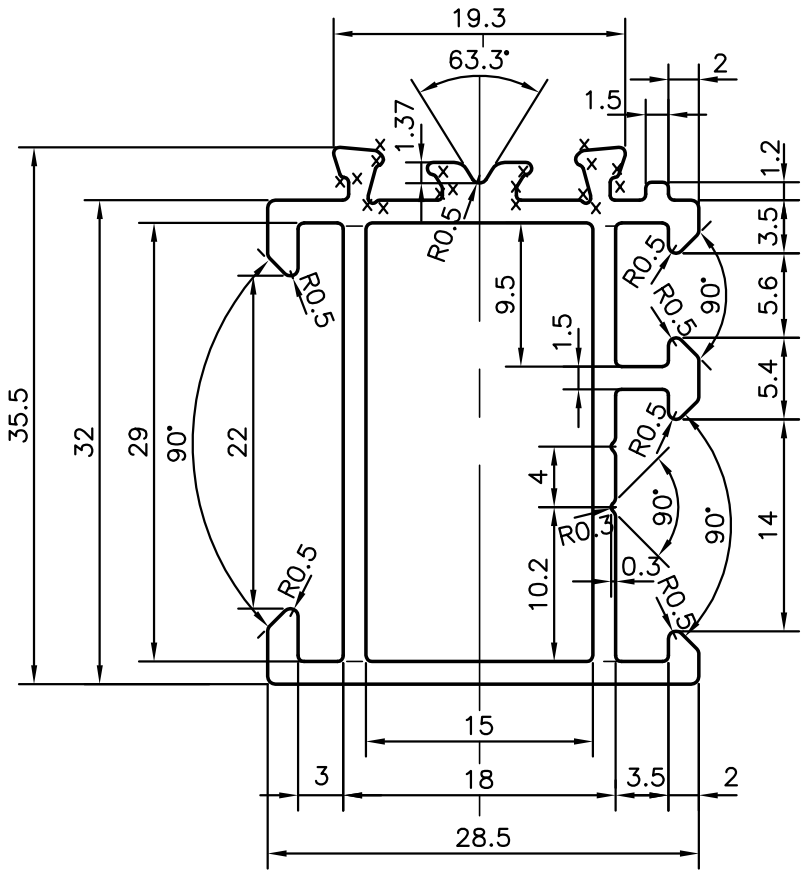

x = 0.3 RADIUS (16 PLACES)

			NAME	DATE
JINDAL SYMBOL OF QUALITY AN ISO 9001 COMPANY	*JINDAL ALUMINIUM LTD.* *BANGALORE-560073 (INDIA)*	DRAWN	J.P.KAUSHIK	29-09-2009
		CHECKED		
		APPROVED		

1. ALL DIMENSIONS ARE IN mm.
2. ROUND OFF ALL SHARP CORNERS WITH 0.40 mm.
3. TOLERANCES WILL BE AS PER IS:6477-1983 UNLESS OTHERWISE SPECIFIED

SCALE	2:1
AREA mm^2	233.857
PERIMETER mm.	202.447
WEIGHT kg/m	0.631

PARTY'S NAME	AGV FENESTRATION PVT LTD., SIRMOUR
PARTY'S DRAWING No.	AS PER DRAWING
ALLOY & TEMPER	HE9WP
DESCRIPTION	WINDOW SECTION

DRAWING No.	SECTION No.
P-9491-1	
S2290	S2290
21366	21366