P–11469
21373

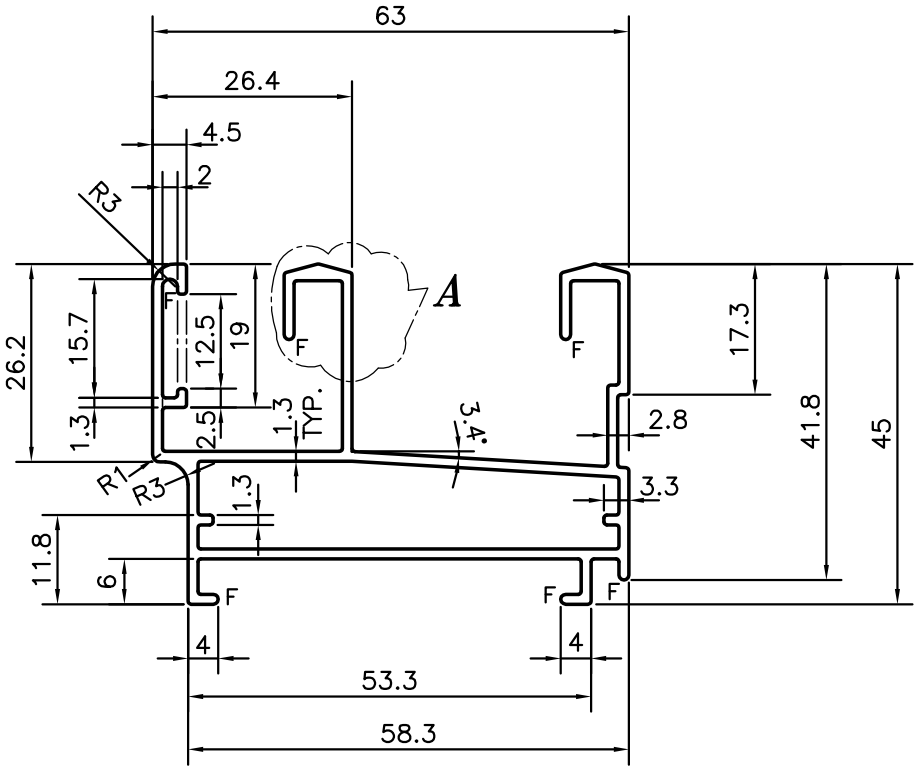

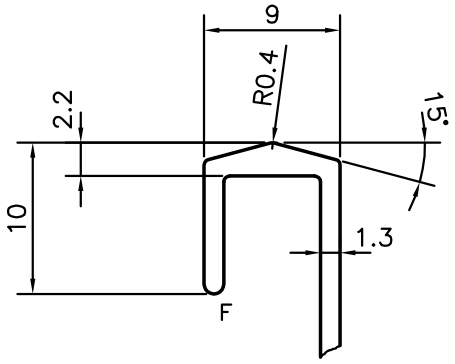

F = FULL RADIUS (6 PLACES)

DETAIL OF 'A'

SCALE 2:1

JINDAL SYMBOL OF QUALITY AN ISO 9001 COMPANY	***JINDAL ALUMINIUM LTD.*** *BANGALORE–560073 (INDIA)*		NAME	DATE
		DRAWN	*PARVESH*	13–01–2012
		CHECKED		
		APPROVED	S.S.GARG	28–01–2012
1. ALL DIMENSIONS ARE IN mm. 2. ROUND OFF ALL SHARP CORNERS WITH 0.40 mm. 3. TOLERANCES WILL BE AS PER IS:6477–1983, UNLESS OTHERWISE SPECIFIED		SCALE		1:1
		AREA mm^2		376.053
		PERIMETER mm.		413.346
PARTY'S NAME	GENERAL CATEGORY, AHMEDABAD MARKET	WEIGHT kg/m		1.015
		DRAWING No.		SECTION No.
PARTY'S DRAWING No.	AS PER SAMPLE	P–11469		–
		21373		21373
ALLOY & TEMPER	HE9 WP			
DESCRIPTION	WINDOW SECTION			