P–11500
21374

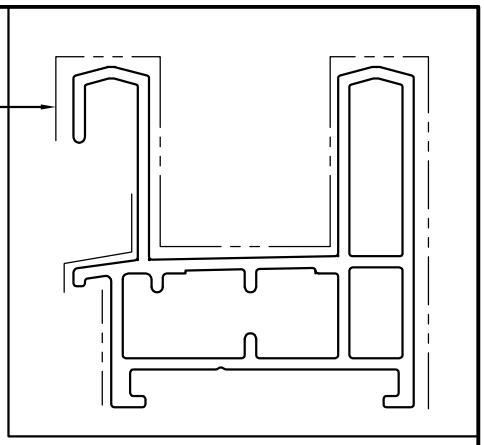

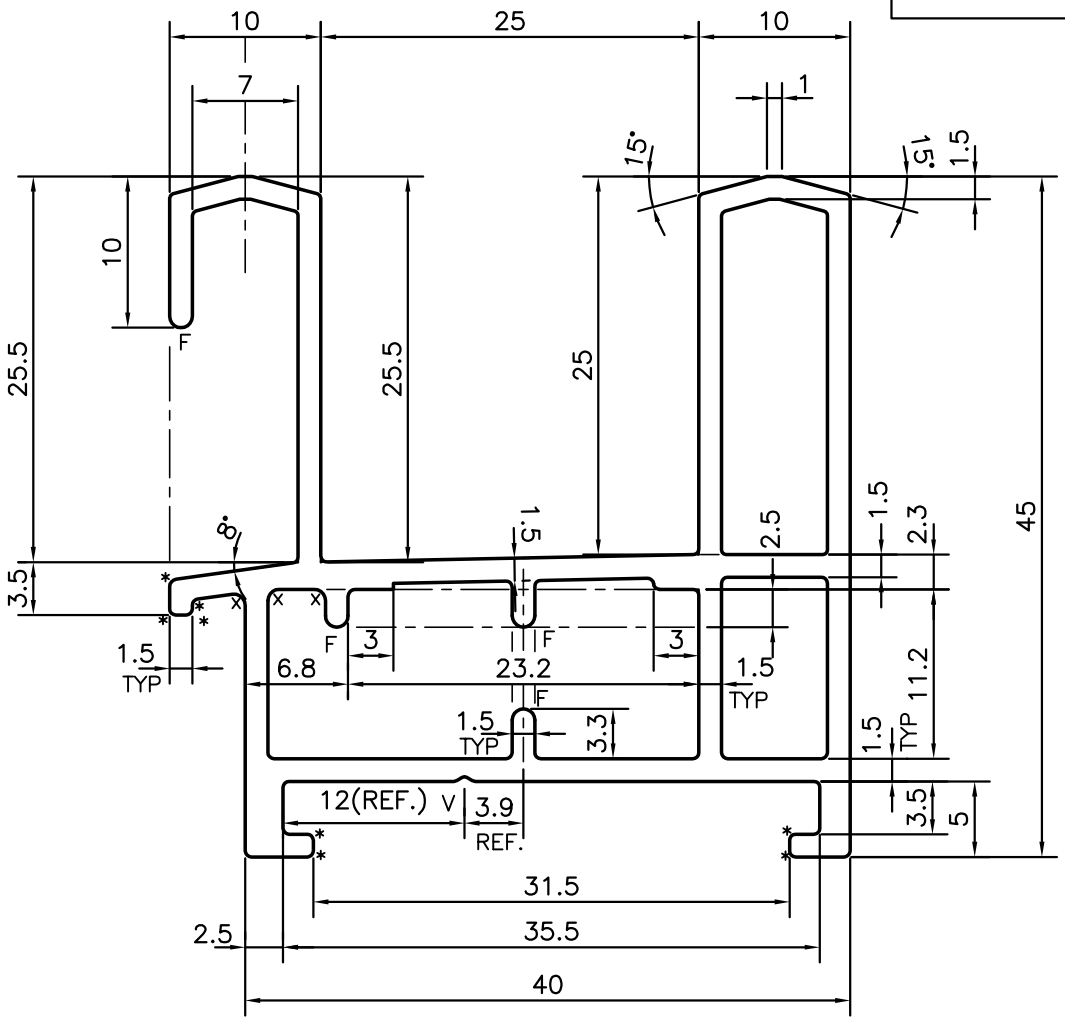

F = FULL RADIUS (4 PLACES)
x = 0.75 RADIUS (3 PLACES)
* = 0.5 RADIUS (8 PLACES)
v = V GROOVE 0.3x120°

			NAME	DATE
SYMBOL OF QUALITY AN ISO 9001 COMPANY	*JINDAL ALUMINIUM LTD.* *BANGALORE–560073 (INDIA)*	DRAWN	J.P.KAUSHIK	25–01–2012
		CHECKED		
		APPROVED	S.S.GARG	01–02–2012

1. ALL DIMENSIONS ARE IN mm.
2. ROUND OFF ALL SHARP CORNERS WITH 0.40 mm.
3. TOLERANCES WILL BE AS PER, IS:6477–1983 UNLESS OTHERWISE SPECIFIED

SCALE	2:1
AREA mm^2	371.673
PERIMETER mm.	274.092
WEIGHT kg/m	1.004

PARTY'S NAME	GENERAL CATEGORY AHAMDABAD MARKET
PARTY'S DRAWING No.	AS PER SAMPLE
ALLOY & TEMPER	HE9 WP
DESCRIPTION	WINDOW SECTION

DRAWING No.	SECTION No.
P–11500	–
21374	21374