P–11606
21385

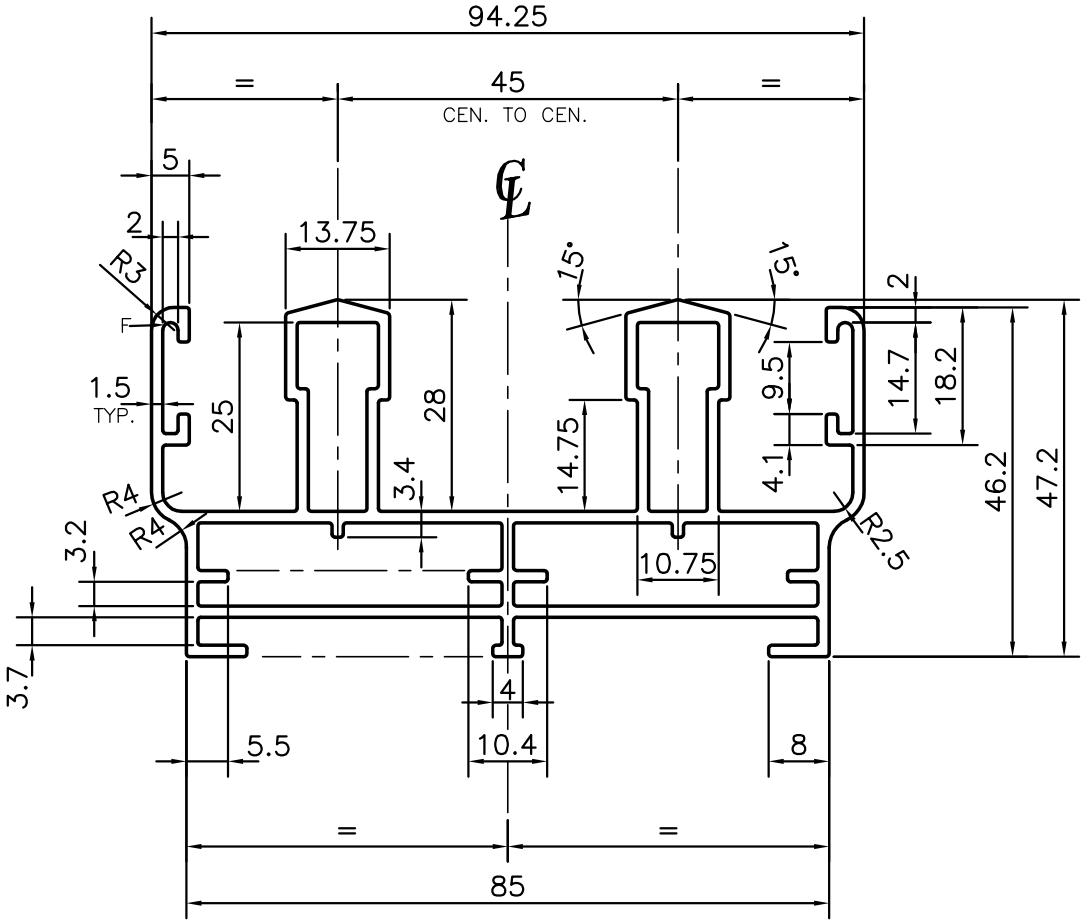

SYMBOL OF QUALITY AN ISO 9001 COMPANY	*JINDAL ALUMINIUM LTD.* *BANGALORE–560073 (INDIA)*		NAME	DATE
		DRAWN	*PARVESH*	20–03–2012
		CHECKED		
		APPROVED	*S.S.GARG*	08–05–2012
1. ALL DIMENSIONS ARE IN mm. 2. ROUND OFF ALL SHARP CORNERS WITH 0.40 mm. 3. TOLERANCES WILL BE AS PER IS:6477–1983, UNLESS OTHERWISE SPECIFIED		SCALE		1:1
		AREA mm^2		730.296
		PERIMETER mm.		532.516
		WEIGHT kg/m		1.972
PARTY'S NAME	GENERAL CATEGORY MUMBAI MARKET	DRAWING No.		SECTION No.
PARTY'S DRAWING No.	AS PER SAMPLE (DRAWING)	P–11606		–
		21385		21385
ALLOY & TEMPER	HE9 WP			
DESCRIPTION	WINDOW SECTION			