P-11596
S3257
21390

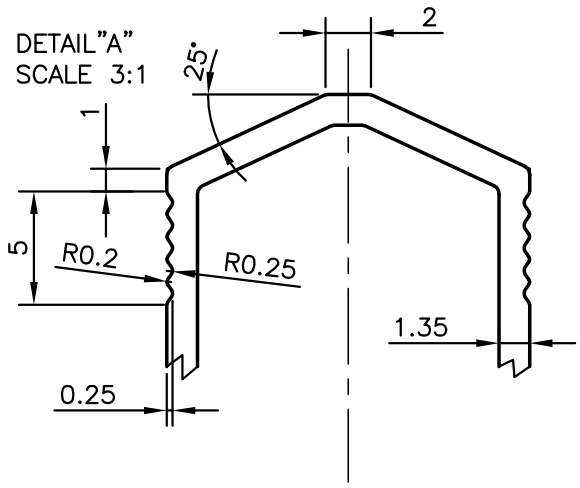

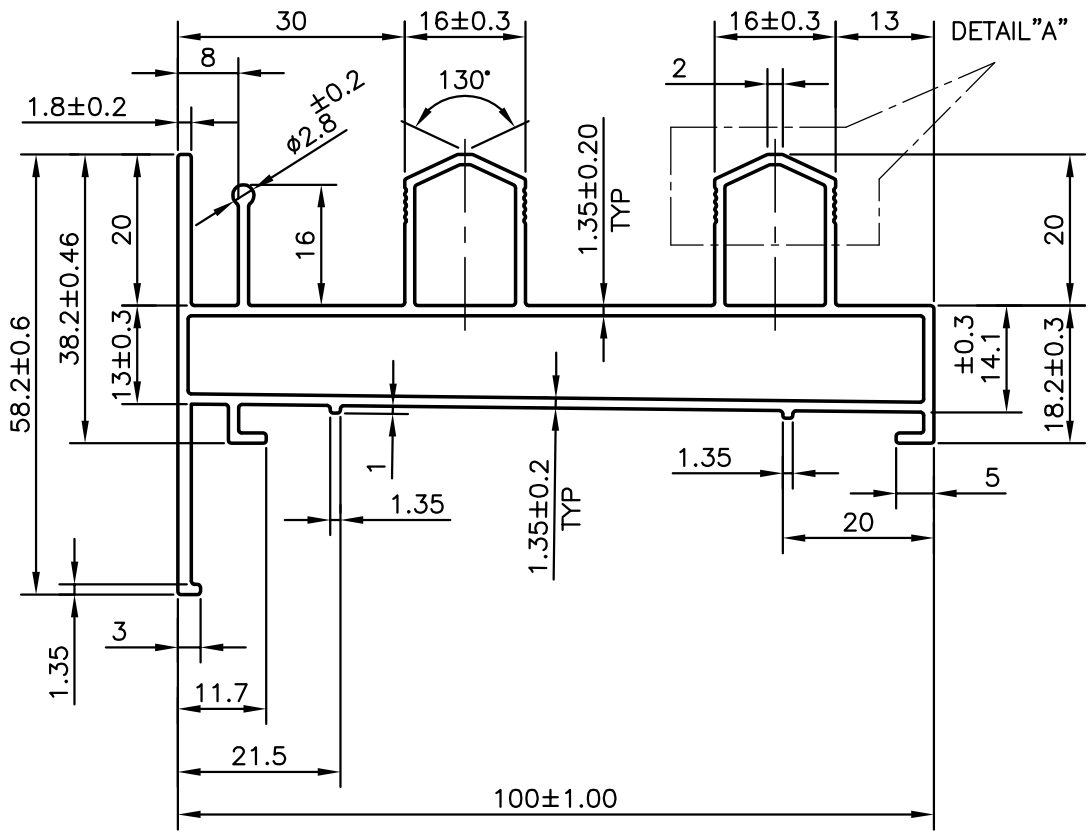

1. STRAIGHTNESS=1.7mm/M
2. TWIST=1.7mm/M
3. ANGULARITY= ±2°
4. FLATNESS = ±1.00

GENERAL WALL THICKNESS = 1.35±0.20

			NAME	DATE
SYMBOL OF QUALITY AN ISO 9001 COMPANY	JINDAL ALUMINIUM LTD. BANGALORE-560073 (INDIA)	DRAWN	RAGHAVENDRA	19-03-2012
		CHECKED		
		APPROVED	S.S.GARG	24-04-2012

1. ALL DIMENSIONS ARE IN mm.
2. ROUND OFF ALL SHARP CORNERS WITH 0.40 mm.
3. TOLERANCES WILL BE AS PER IS:6477-1983 UNLESS OTHERWISE SPECIFIED

SCALE	1:1
AREA mm^2	560.336
PERIMETER mm.	456.423
WEIGHT kg/m	1.513

PARTY'S NAME	PARAMOUNT VIJETHA HOLDINGS, BANGALORE
PARTY'S DRAWING No.	AS PER DRAWING NO. 1724
ALLOY & TEMPER	6063 T6
DESCRIPTION	WINDOW SECTION

DRAWING No.	SECTION No.
P-11596	–
S3257	S3257
21390	21390