| |
|---|
| P–11273 |
| S3110 |
| 21399 |

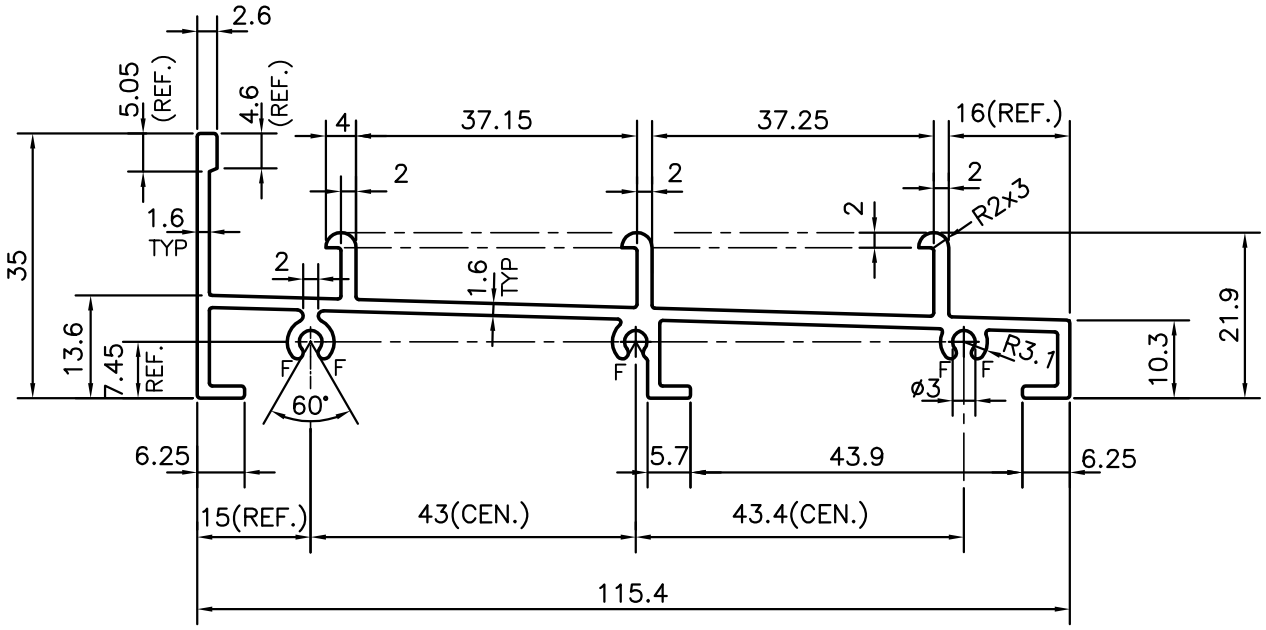


F = FULL RADIUS (5 PLACES )

| | | | | |
|---|---|---|---|---|
| JINDAL<br>SYMBOL OF QUALITY<br>AN ISO 9001 COMPANY | *JINDAL ALUMINIUM LTD.*<br>*BANGALORE–560073 (INDIA)* | | NAME | DATE |
| | | DRAWN | J.P.KAUSHIK | 17–10–2011 |
| | | CHECKED | | |
| | | APPROVED | S.S.GARG | 25–11–2011 |
| 1. ALL DIMENSIONS ARE IN mm.<br>2. ROUND OFF ALL SHARP CORNERS WITH 0.40 mm.<br>3. TOLERANCES WILL BE AS PER, BS:EN–755–9 UNLESS OTHERWISE SPECIFIED | | SCALE | | 1:1 |
| | | AREA $mm^2$ | | 409.328 |
| | | PERIMETER mm. | | 473.522 |
| | | WEIGHT kg/m | | 1.105 |
| PARTY'S NAME | B.L.KASHYAP & SONS LTD. | DRAWING No. | | SECTION No. |
| PARTY'S DRAWING No. | AS PER DRAWING | P–11273 | | – |
| ALLOY & TEMPER | HE9 WP | S3110 | | S3110 |
| | | 21399 | | 21399 |
| DESCRIPTION | WINDOW SECTION (FRAME No 6) | | | |