| |
|---|
| P–11977 |
| 21402 |
| |

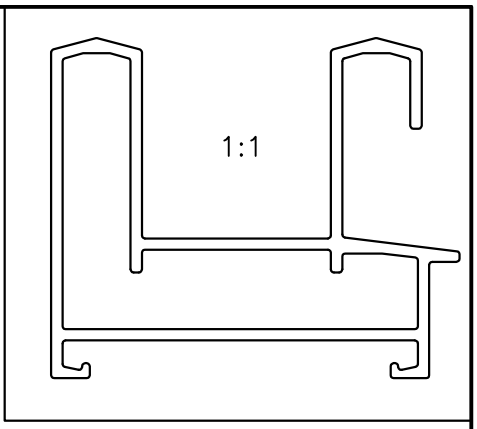


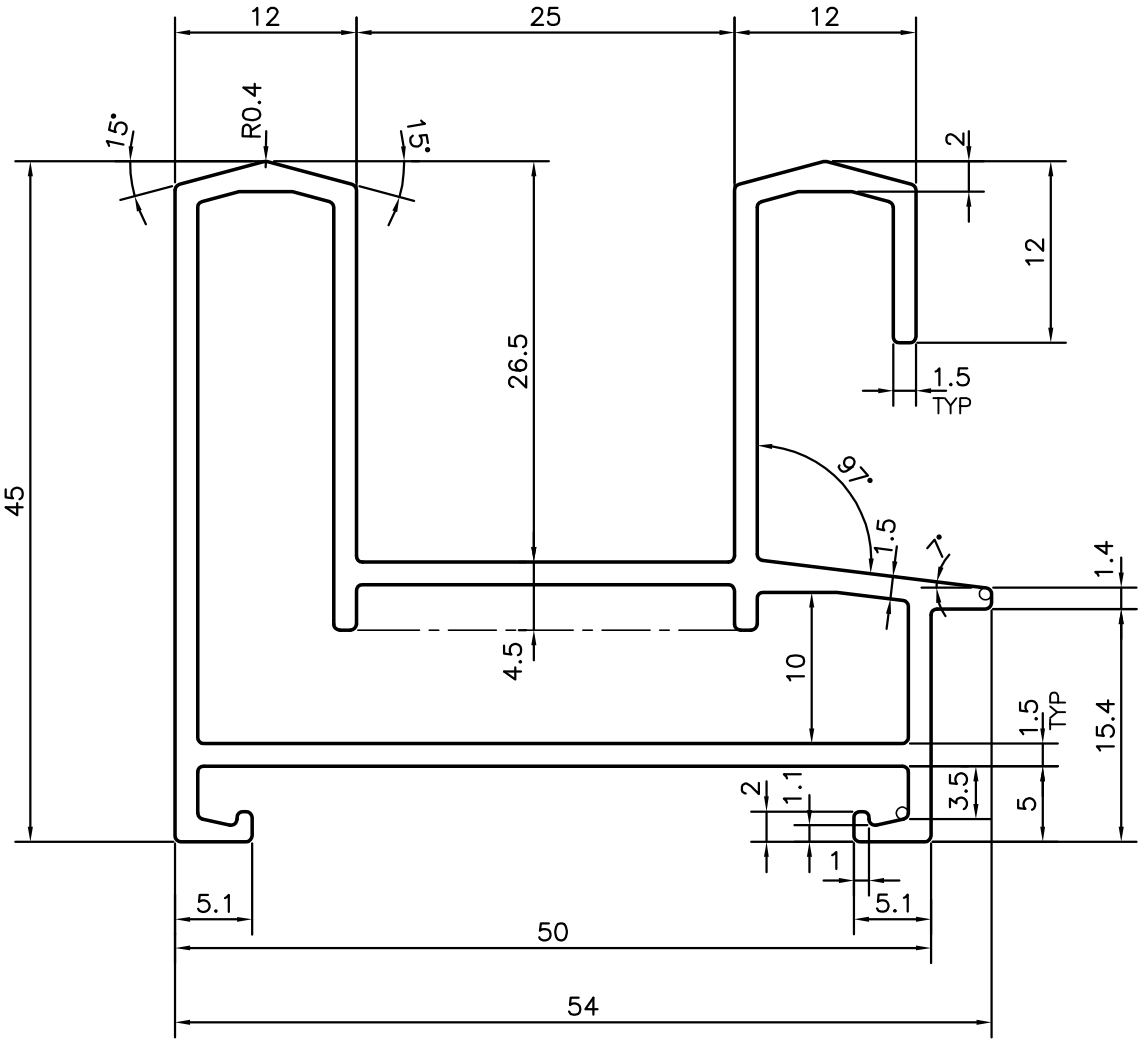


| | | | | |
|---|---|---|---|---|
| JINDAL<br>SYMBOL OF QUALITY<br>AN ISO 9001 COMPANY | *JINDAL ALUMINIUM LTD.*<br>*BANGALORE–560073 (INDIA)* | | NAME | DATE |
| | | DRAWN | J.P.KAUSHIK | 16–08–2012 |
| | | CHECKED | | |
| | | APPROVED | *S.S.GARG* | 31–08–2012 |
| 1. ALL DIMENSIONS ARE IN mm.<br>2. ROUND OFF ALL SHARP CORNERS WITH 0.40 mm.<br>3. TOLERANCES WILL BE AS PER,BS:EN–755–9 UNLESS OTHERWISE SPECIFIED | | SCALE | | 2:1 |
| | | AREA $mm^2$ | | 367.613 |
| | | PERIMETER mm. | | 306.437 |
| PARTY'S NAME | GENERAL CATEGORY, BANGALORE MARKET | WEIGHT kg/m | | 0.993 |
| | | DRAWING No. | | SECTION No. |
| PARTY'S DRAWING No. | 6202 54x45 | P–11977 | | – |
| ALLOY & TEMPER | 63400 WP | 21402 | | 21402 |
| DESCRIPTION | WINDOW SECTION | | | |