P–12515	
21419	

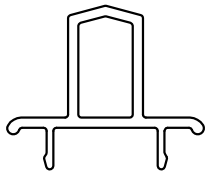

SCALE :– 1:1

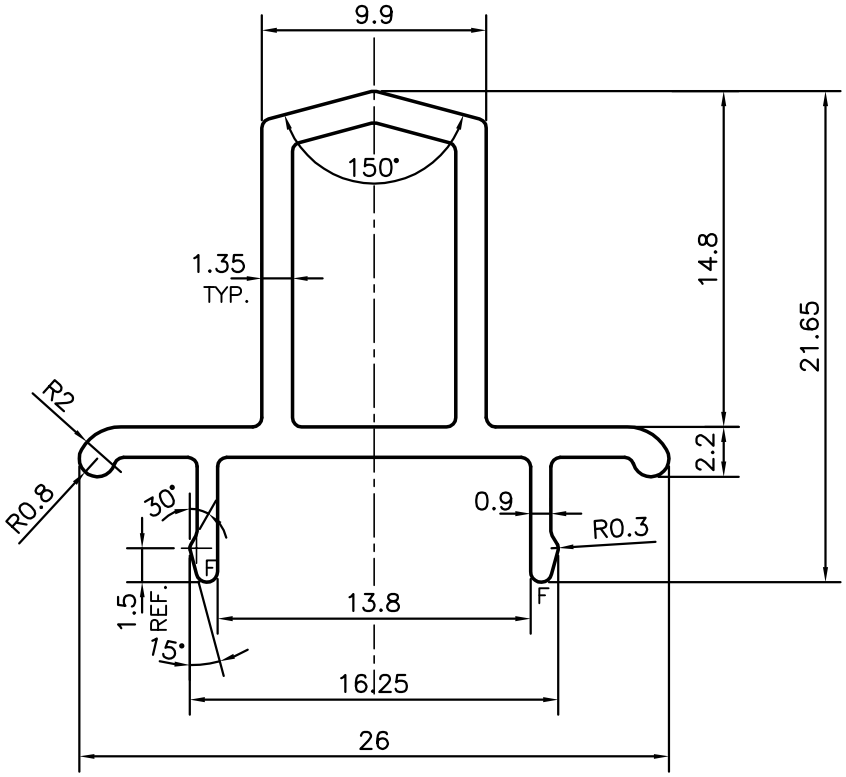

F = FULL RADIUS (2 PLACES)

JINDAL SYMBOL OF QUALITY AN ISO 9001 COMPANY	*JINDAL ALUMINIUM LTD.* *BANGALORE–560073 (INDIA)*		NAME	DATE
		DRAWN	*PARVESH*	06–02–2013
		CHECKED		
		APPROVED	S.S.GARG	13–02–2013

1. ALL DIMENSIONS ARE IN mm.
2. ROUND OFF ALL SHARP CORNERS WITH 0.40 mm.
3. TOLERANCES WILL BE AS PER IS:6477–1983 , UNLESS OTHERWISE SPECIFIED

SCALE	3:1
AREA mm^2	93.701
PERIMETER mm.	102.643
WEIGHT kg/m	0.253

PARTY'S NAME	GENERAL CATEGORY, AHMEDABAD MARKET
PARTY'S DRAWING No.	AS PER SAMPLE
ALLOY & TEMPER	HE9 WP
DESCRIPTION	WINDOW SECTION

DRAWING No.	SECTION No.
P–12515	–
21419	21419