P–12542
S3677
21493

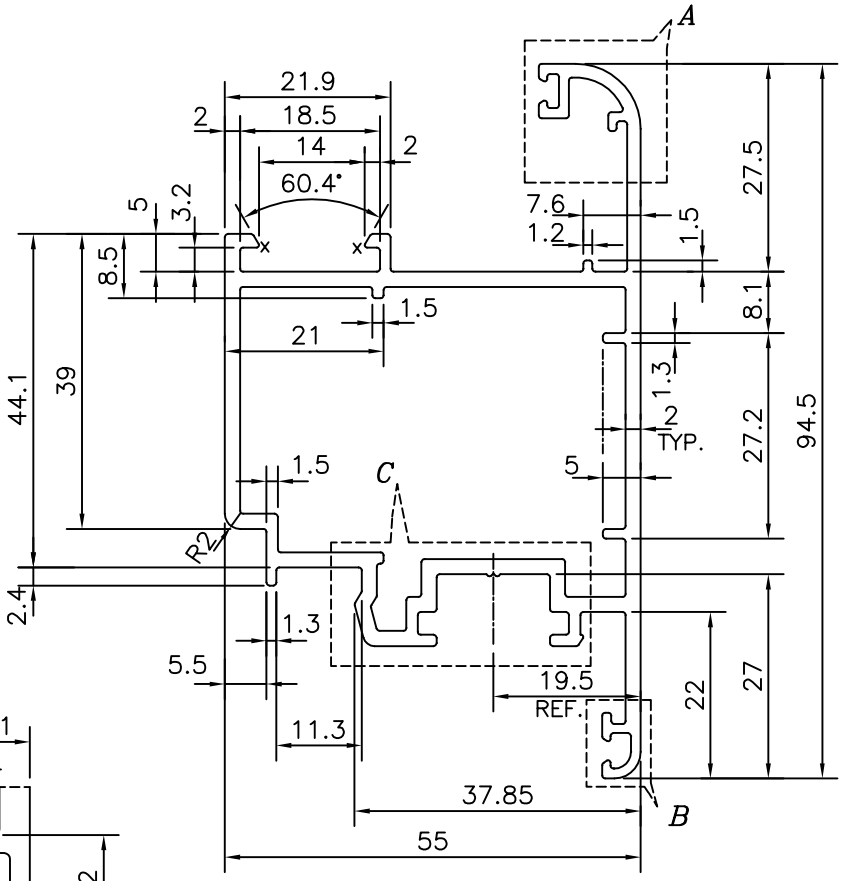

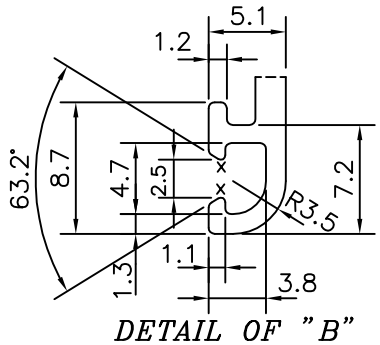

DETAIL OF "B"
SCALE 2:1

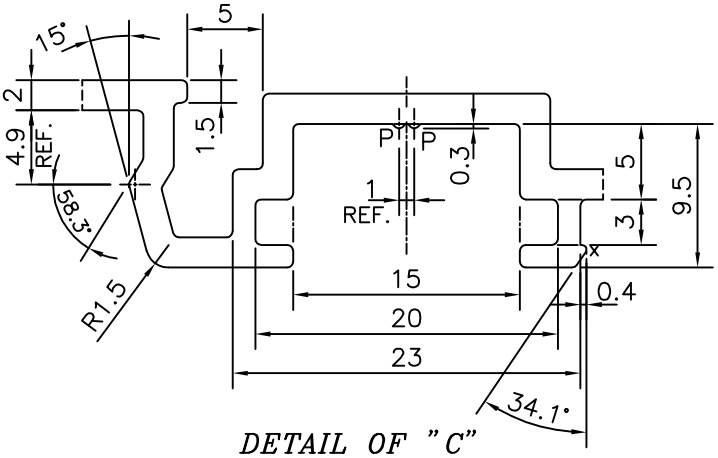

DETAIL OF "C"
SCALE 2:1

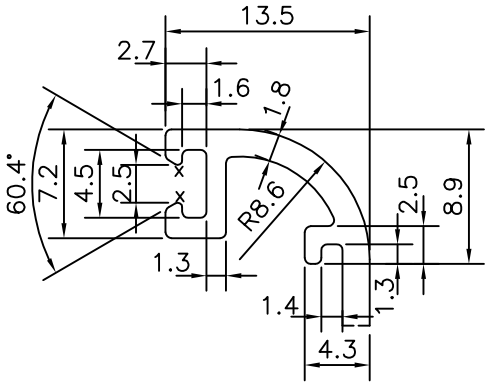

DETAIL OF "A"
SCALE 2:1

X = RADIUS 0.3 mm. (7 PLACES)
P = PIP 0.3x90° (2 PLACES)

SYMBOL OF QUALITY
AN ISO 9001 COMPANY

JINDAL ALUMINIUM LTD.

BANGALORE–560073 (INDIA)

	NAME	DATE
DRAWN	*PARVESH*	15–02–2013
CHECKED		
APPROVED	*S.S.GARG*	27–02–2013

1. ALL DIMENSIONS ARE IN mm.
2. ROUND OFF ALL SHARP CORNERS WITH 0.40 mm.
3. TOLERANCES WILL BE AS PER IS:6477–1983 , UNLESS OTHERWISE SPECIFIED

SCALE	1:1
AREA mm^2	602.622
PERIMETER mm.	423.203
WEIGHT kg/m	1.627

PARTY'S NAME	HATIM GLAZING & CLADDING PVT. LTD., MUMBAI
PARTY'S DRAWING No.	AS PER Auto CAD DRAWING
ALLOY & TEMPER	HE9 WP
DESCRIPTION	WINDOW SECTION

DRAWING No.	SECTION No.
P–12542	–
S3677	S3677
21493	21493