P–11683
S3323
21528

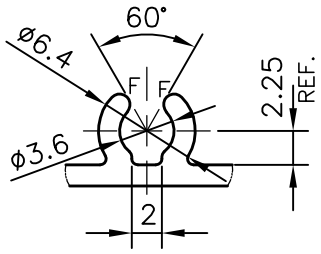

DETAIL OF "A"
SCALE :– 2:1

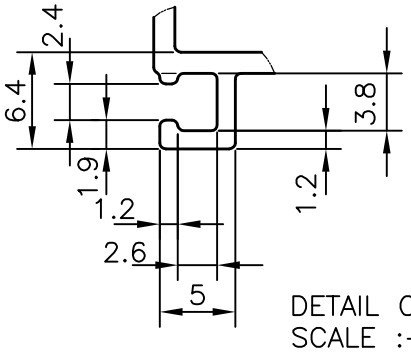

DETAIL OF "B"
SCALE :– 2:1

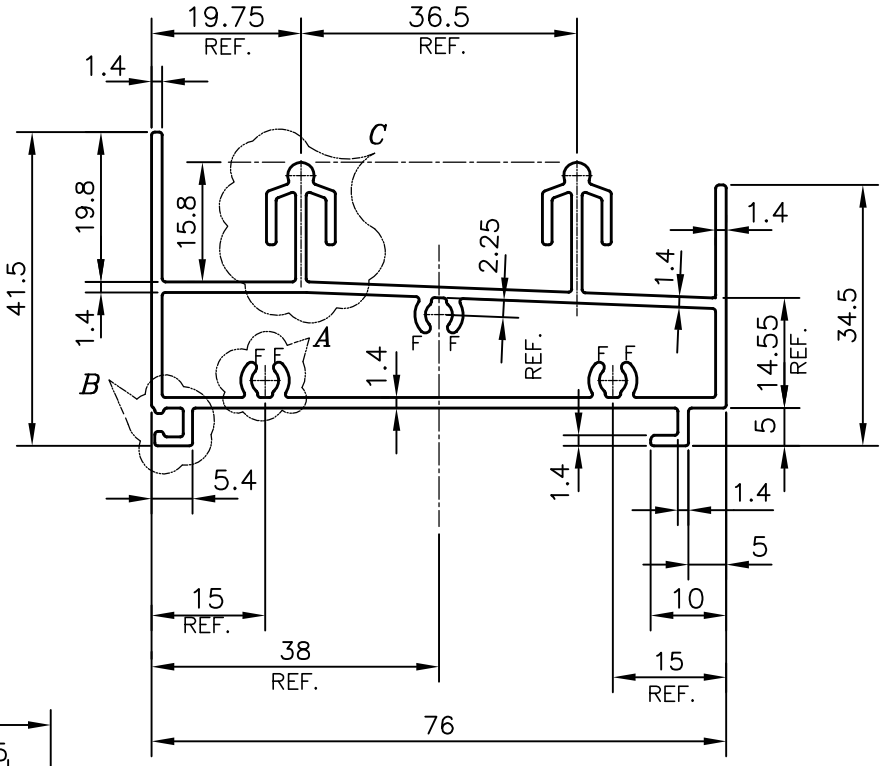

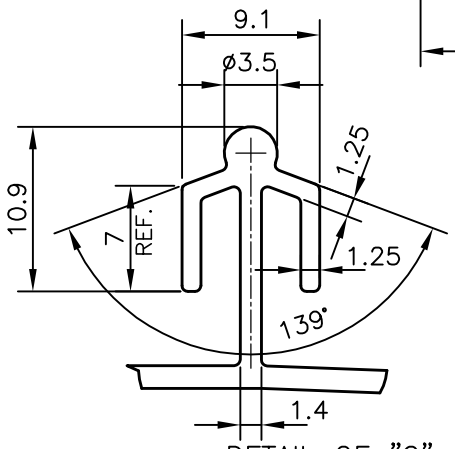

DETAIL OF "C"
SCALE :– 2:1

F = FULL RADIUS (6 PLACES)

Q71751

			NAME	DATE
JINDAL SYMBOL OF QUALITY AN ISO 9001 COMPANY	*JINDAL ALUMINIUM LTD.* *BANGALORE–560073 (INDIA)*	DRAWN	*PARVESH*	23–04–2012
		CHECKED		
		APPROVED	*J.N.RAI*	04–06–2012

1. ALL DIMENSIONS ARE IN mm.
2. ROUND OFF ALL SHARP CORNERS WITH 0.40 mm.
3. TOLERANCES WILL BE AS PER IS:6477–1983, UNLESS OTHERWISE SPECIFIED

SCALE	1:1
AREA mm^2	468.711
PERIMETER mm.	426.071
WEIGHT kg/m	1.266

PARTY'S NAME	SAHARA PRIME CITY LTD., GURGAON
PARTY'S DRAWING No.	SW7*
ALLOY & TEMPER	HE9 WP
DESCRIPTION	WINDOW SECTION

DRAWING No.	SECTION No.
P–11683	–
S3323	S3323
21528	21528