P-11709
S3343
21566

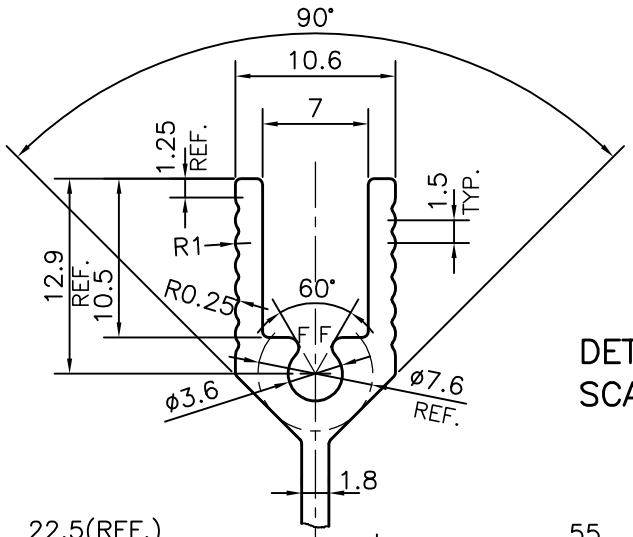

DETAIL"C"
SCALE 3:1

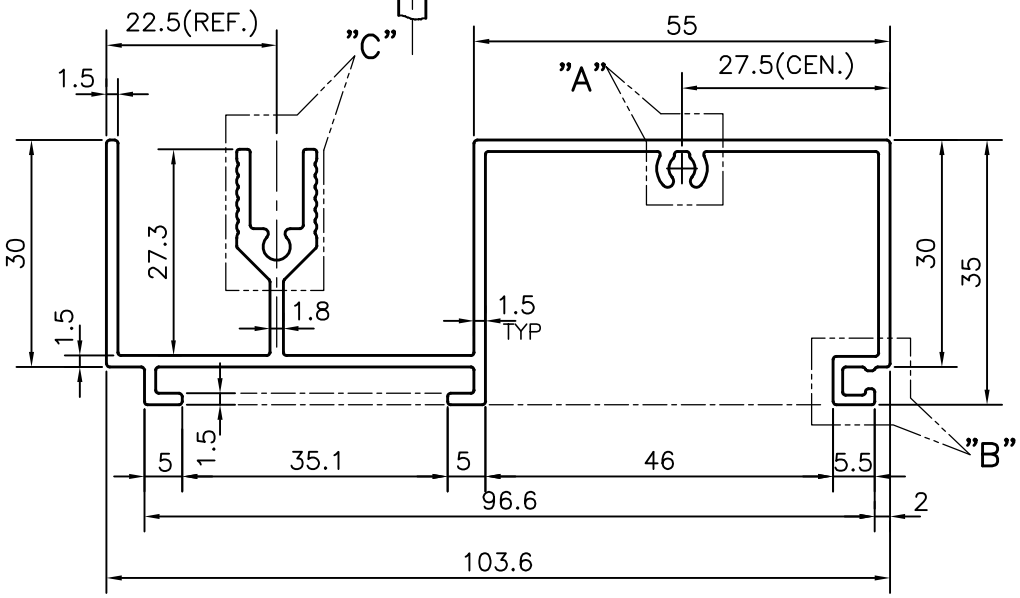

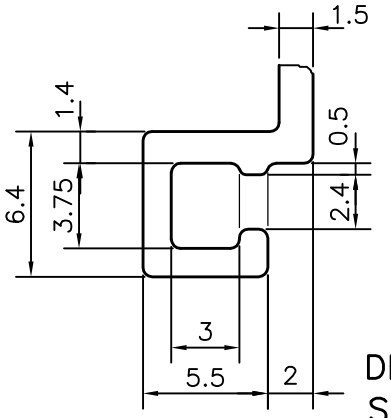

DETAIL"B"
SCALE 3:1

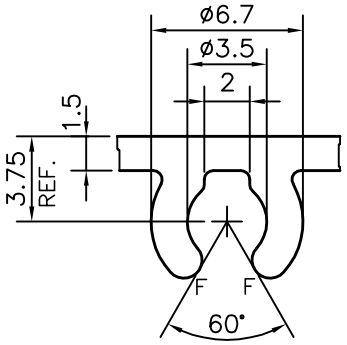

DETAIL"A"
SCALE 3:1

Q No:-71730

			NAME	DATE
JINDAL SYMBOL OF QUALITY AN ISO 9001 COMPANY	*JINDAL ALUMINIUM LTD.* *BANGALORE-560073 (INDIA)*	DRAWN	J.P.KAUSHIK	25-04-2012
		CHECKED		
		APPROVED	S.S.GARG	06-06-2012

1. ALL DIMENSIONS ARE IN mm.
2. ROUND OFF ALL SHARP CORNERS WITH 0.40 mm.
3. TOLERANCES WILL BE AS PER,IS:3965-1981 UNLESS OTHERWISE SPECIFIED

SCALE	1:1
AREA mm^2	441.912
PERIMETER mm.	556.522
WEIGHT kg/m	1.193

PARTY'S NAME	SAHARA PRIME CITY LTD., GURGAON
PARTY'S DRAWING No.	SD2b
ALLOY & TEMPER	HE9 WP
DESCRIPTION	WINDOW SECTION

DRAWING No.	SECTION No.
P-11709	-
S3343	S3343
21566	21566