P–14103–1
S4312
21595

ISSUE–2

CHAMFER 4x45° ADDED

WEIGHT ALSO CHANGED FROM 5.948 kg/m TO 5.979 kg/m

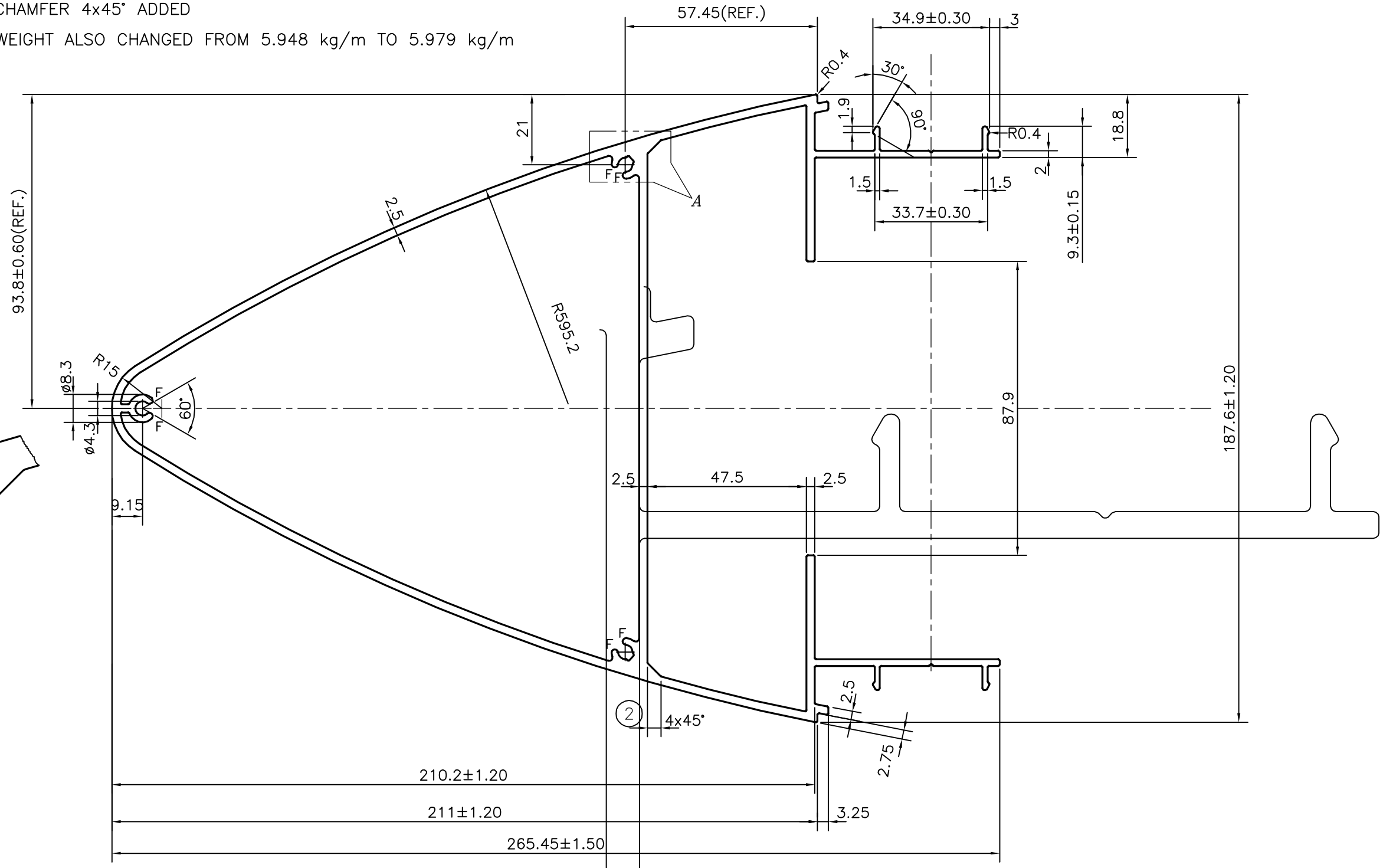

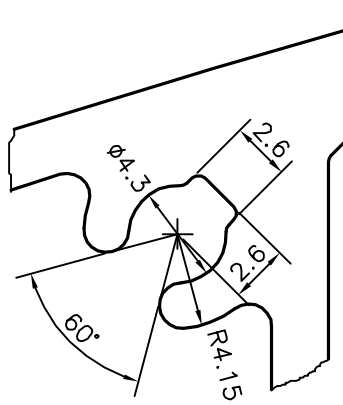

DETAIL OF "A"
SCALE 3:1

F FULL RADIUS (6 PLACES)

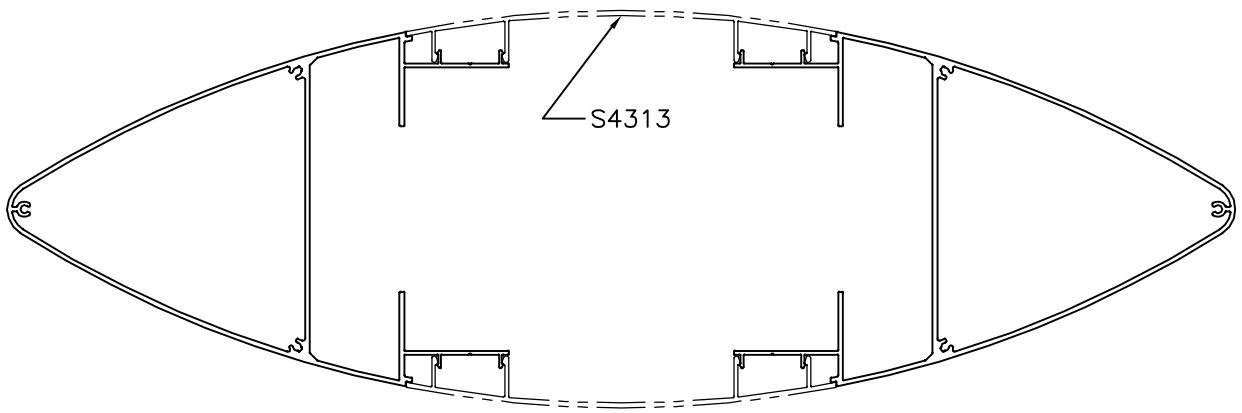

SYMBOL OF QUALITY
AN ISO 9001 COMPANY

JINDAL ALUMINIUM LTD.
BANGALORE–560073 (INDIA)

1. ALL DIMENSIONS ARE IN mm.
2. ROUND OFF ALL SHARP CORNERS WITH 0.40 mm.
3. TOLERANCES WILL BE AS PER BS:EN–12020–2 UNLESS OTHERWISE SPECIFIED

PARTY'S NAME	MERO ASIA PACIFIC ENGINEERING PVT. LTD., CHENNAI
PARTY'S DRAWING No.	AS PER AutoCAD DRAWING
ALLOY & TEMPER	6063 T6
DESCRIPTION	LOUVER SECTION

	NAME	DATE
DRAWN	J.P.KAUSHIK	08–08–2015
CHECKED		
APPROVED	S.S.GARG	14–08–2015
SCALE		0.75:1
AREA mm^2		2214.512
PERIMETER mm.		1210.942
WEIGHT kg/m		5.979

DRAWING No.	SECTION No.
P–14103–1	–
S4312	S4312
21595	21595(ISSUE–2)