P–12098
S3558
21607

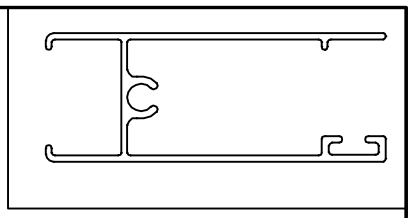

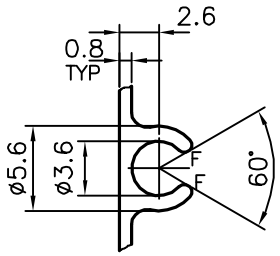

DETAIL"A"
SCALE 2:1

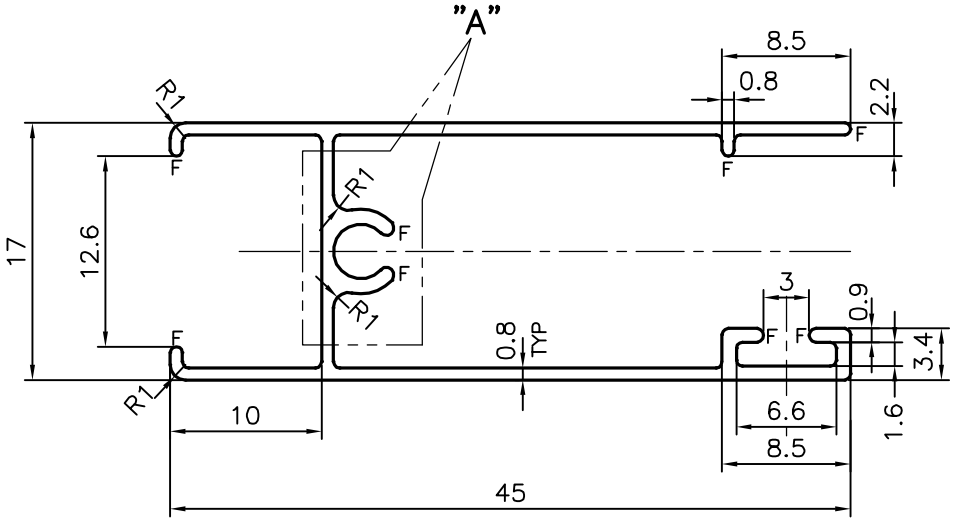

F = FULL RADIUS (8 PLACES)

JINDAL SYMBOL OF QUALITY AN ISO 9001 COMPANY	*JINDAL ALUMINIUM LTD.* *BANGALORE–560073 (INDIA)*		NAME	DATE
		DRAWN	J.P.KAUSHIK	03–10–2012
		CHECKED		
		APPROVED	S.S.GARG	20–11–2012
1. ALL DIMENSIONS ARE IN mm. 2. ROUND OFF ALL SHARP CORNERS WITH 0.40 mm. 3. TOLERANCES WILL BE AS PER, IS:3965–1981 UNLESS OTHERWISE SPECIFIED		SCALE		2:1
		AREA mm^2		105.772
		PERIMETER mm.		246.187
		WEIGHT kg/m		0.286
PARTY'S NAME	KC WINDOORS (I) PVT.LTD., BANGALORE	DRAWING No.		SECTION No.
PARTY'S DRAWING No.	AS PER SAMPLE	P–12098		–
ALLOY & TEMPER	HE9 WP	S3558		S3558
		21607		21607
DESCRIPTION	WINDOW SECTION			