P−14081
S4291
21647

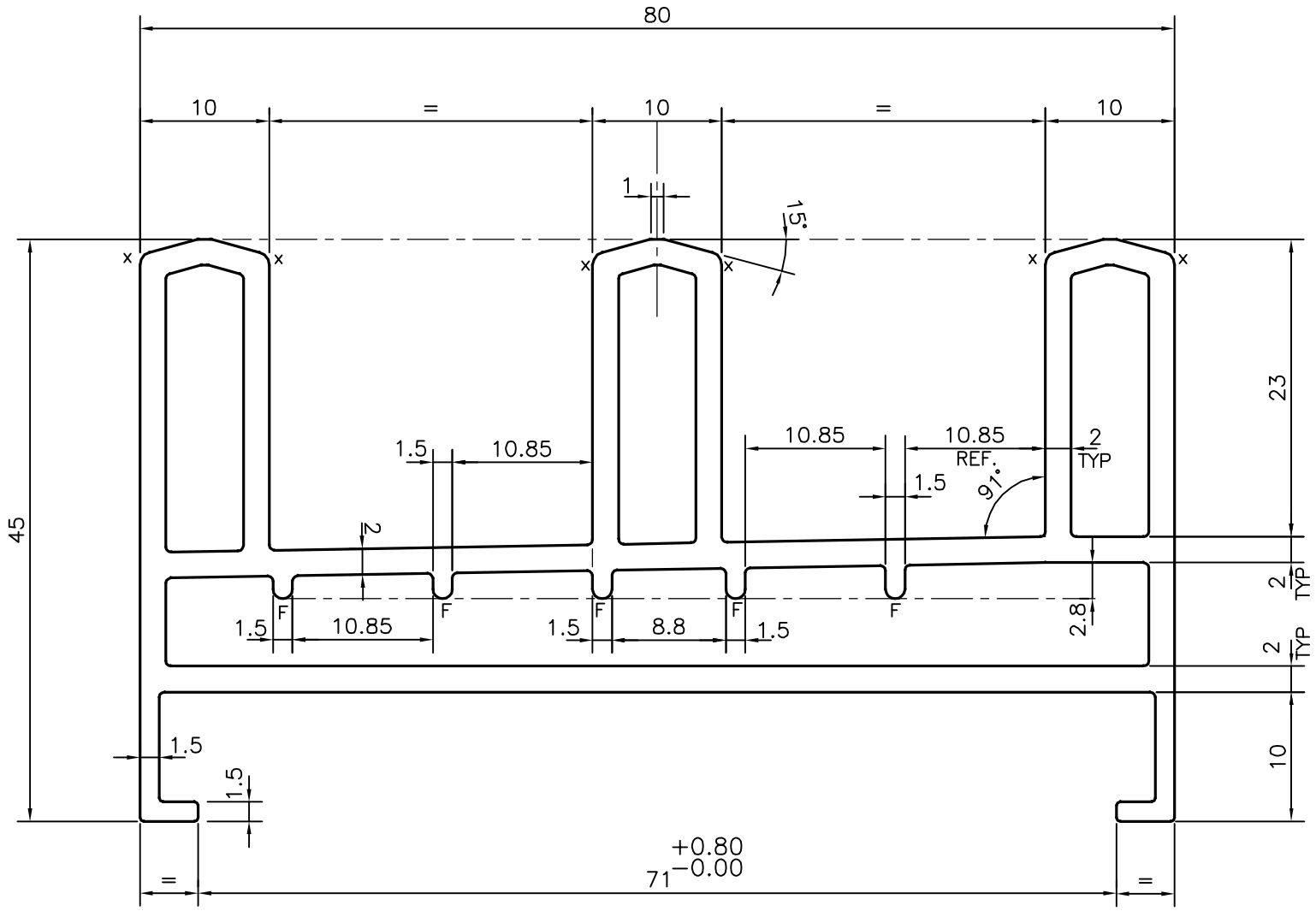

ISSUE−2 :−

TOLERANCE ADDED & DIMENSION CHANGED FROM 70 TO 71 +0.80 −0.00

WEIGHT ALSO CHANGED FROM 1.928 kg/M TO 1.924kg/M

x = 1.0 RADIUS (6 PLACES)
F = FULL RADIUS (5 PLACES)

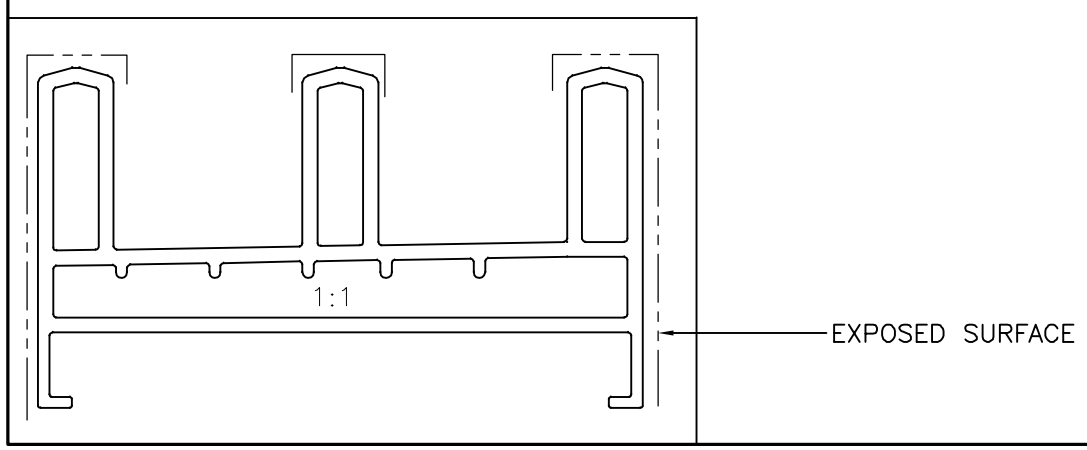

JINDAL SYMBOL OF QUALITY AN ISO 9001 COMPANY	*JINDAL ALUMINIUM LTD.* *BANGALORE−560073 (INDIA)*		NAME	DATE
		DRAWN	J.P.KAUSHIK	20−11−2014
		CHECKED		
		APPROVED	S.S.GARG	21−11−2014
1. ALL DIMENSIONS ARE IN mm. 2. ROUND OFF ALL SHARP CORNERS WITH 0.40 mm. 3. TOLERANCES WILL BE AS PER IS:6477−1983 UNLESS OTHERWISE SPECIFIED		SCALE		2:1
		AREA mm^2		712.551
		PERIMETER mm.		366.403
PARTY'S NAME	ALU−WINTECH SLIDING SYSTEMS, BANGALORE	WEIGHT kg/m		1.924
		DRAWING No.		SECTION No.
PARTY'S DRAWING No.	AS PER DRAWING	P−14081		−
ALLOY & TEMPER	HE9 WP	S4291		S4291(ISSUE−2)
		21647		21647
DESCRIPTION	WINDOW SECTION			