P-10816-2
S2961
21662

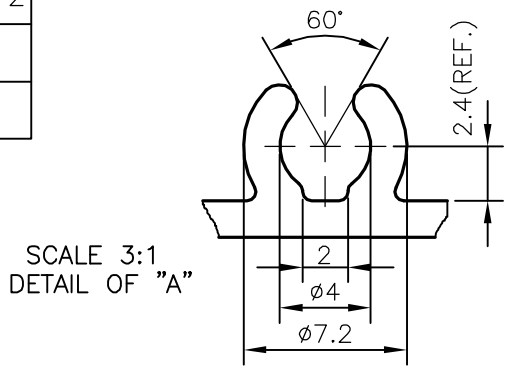

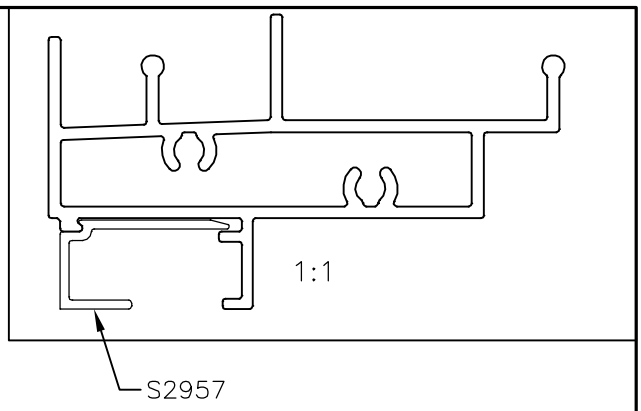

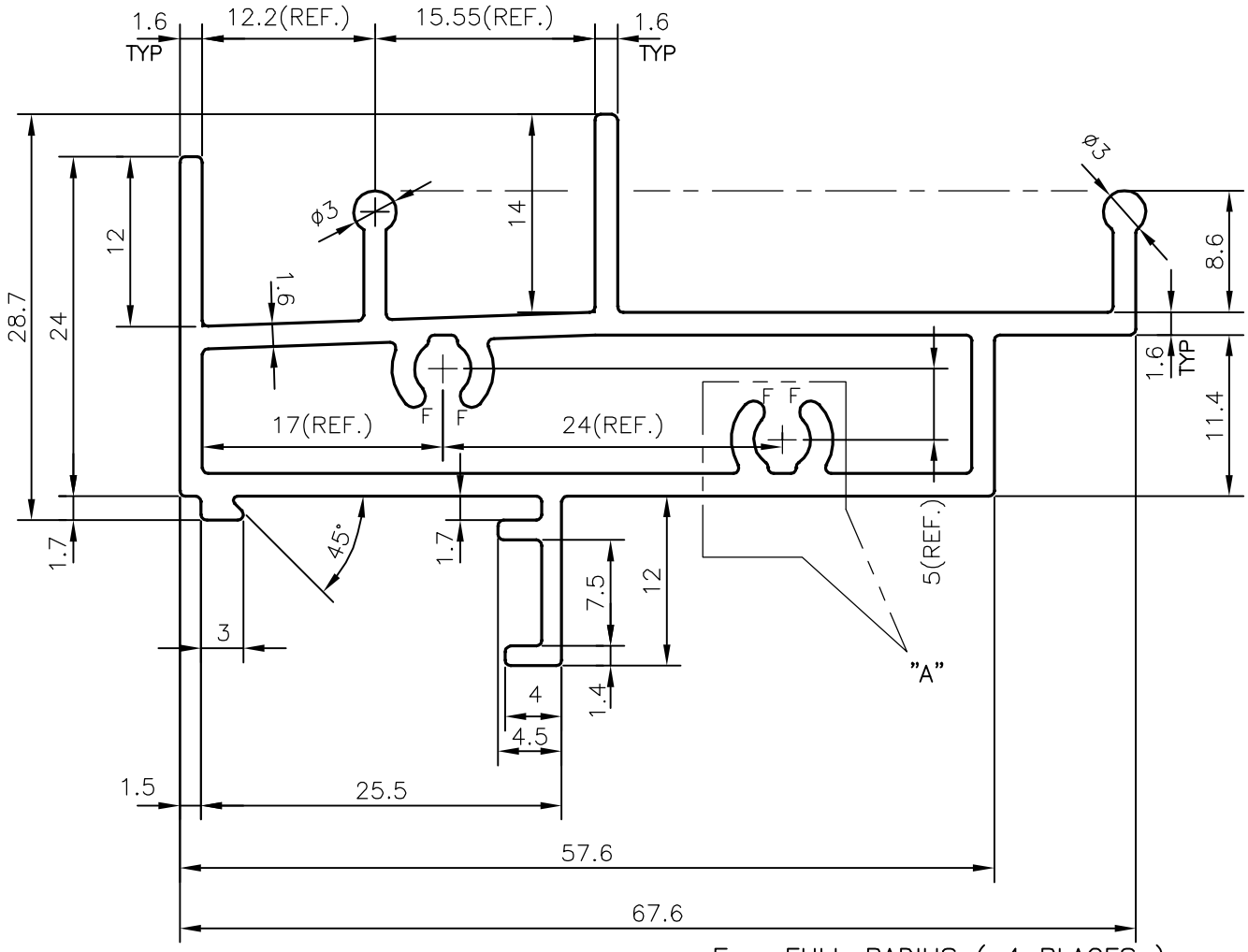

F = FULL RADIUS (4 PLACES)

JINDAL SYMBOL OF QUALITY AN ISO 9001 COMPANY	*JINDAL ALUMINIUM LTD.* *BANGALORE-560073 (INDIA)*		
			NAME / DATE
		DRAWN	J.P.KAUSHIK / 10-05-2011
		CHECKED	
		APPROVED	S.S.GARG / 09-06-2011
1. ALL DIMENSIONS ARE IN mm. 2. ROUND OFF ALL SHARP CORNERS WITH 0.40 mm. 3. TOLERANCES WILL BE AS PER IS:6477-1983 UNLESS OTHERWISE SPECIFIED		SCALE	2:1
		AREA mm^2	367
		PERIMETER mm.	283.883
		WEIGHT kg/m	0.991
PARTY'S NAME	DG-MAP, NEW DELHI	DRAWING No.	SECTION No.
PARTY'S DRAWING No.	DGM-04	P-10816-2	–
ALLOY & TEMPER	HE9 WP	S2961 21662	S2961 21662
DESCRIPTION	WINDOW SECTION (DIVIDER)		