P-10905-1
S2967
21666

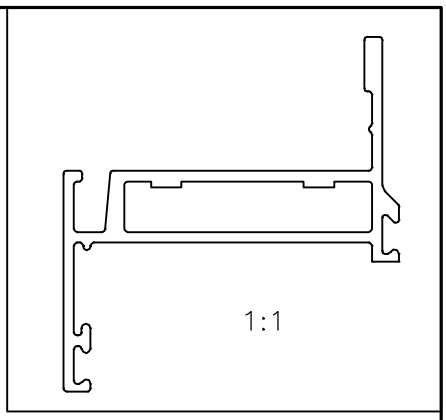

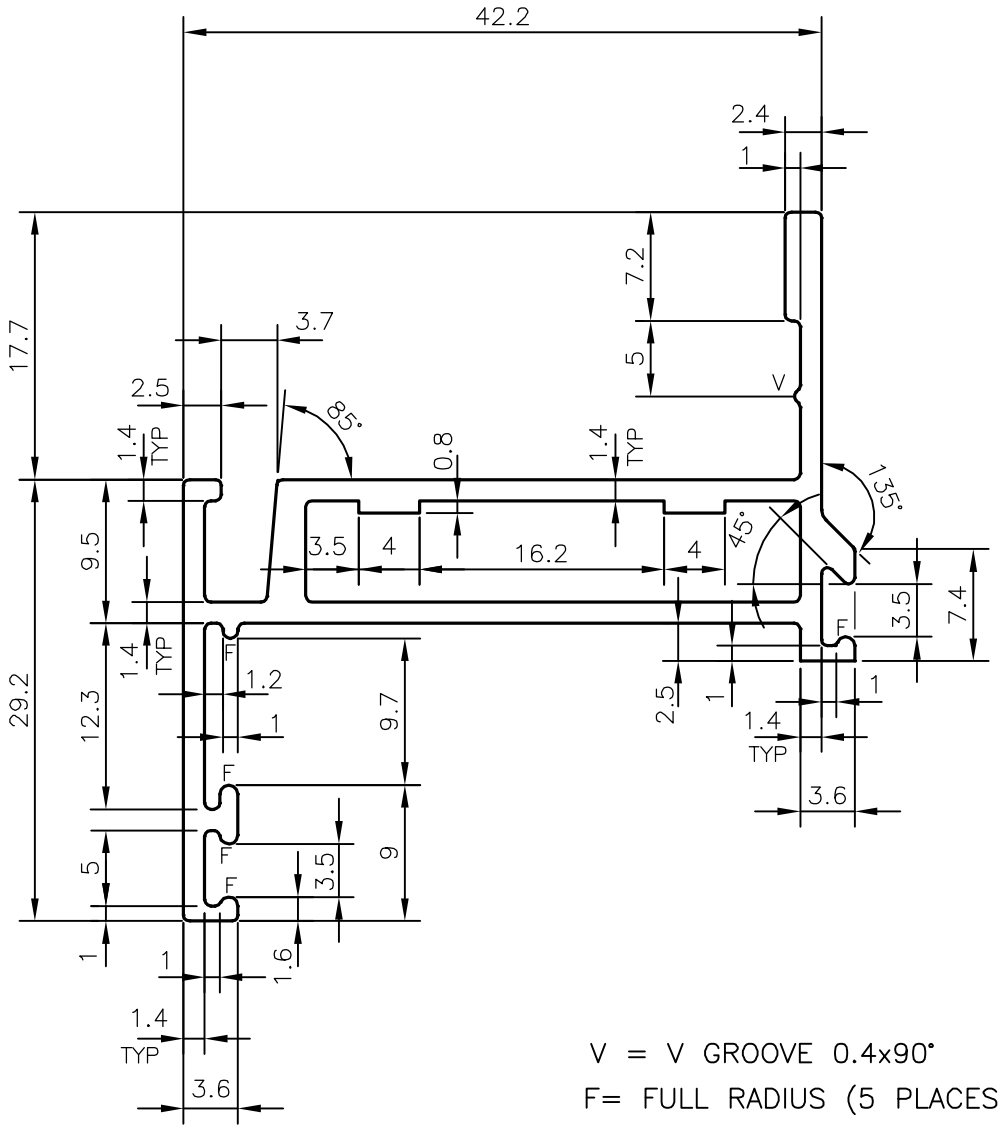

V = V GROOVE 0.4x90°

F= FULL RADIUS (5 PLACES)

SYMBOL OF QUALITY AN ISO 9001 COMPANY	***JINDAL ALUMINIUM LTD.*** *BANGALORE-560073 (INDIA)*		NAME / DATE
		DRAWN	J.P.KAUSHIK / 07-05-2011
		CHECKED	
		APPROVED	S.S.GARG / 09-06-2011

1. ALL DIMENSIONS ARE IN mm.
2. ROUND OFF ALL SHARP CORNERS WITH 0.40 mm.
3. TOLERANCES WILL BE AS PER IS:6477-1983 UNLESS OTHERWISE SPECIFIED

SCALE	2:1
AREA mm^2	241.85
PERIMETER mm.	223.247
WEIGHT kg/m	0.653

PARTY'S NAME	DG-MAP, NEW DELHI
PARTY'S DRAWING No.	DGM-15
ALLOY & TEMPER	HE9 WP
DESCRIPTION	WINDOW SECTION (GLASS SHUTTER)

DRAWING No.	SECTION No.
P-10905-1	–
S2967	S2967
21666	21666