P–15857
21684

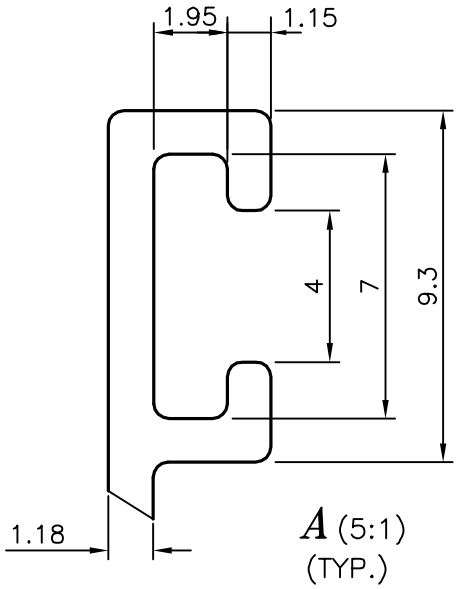

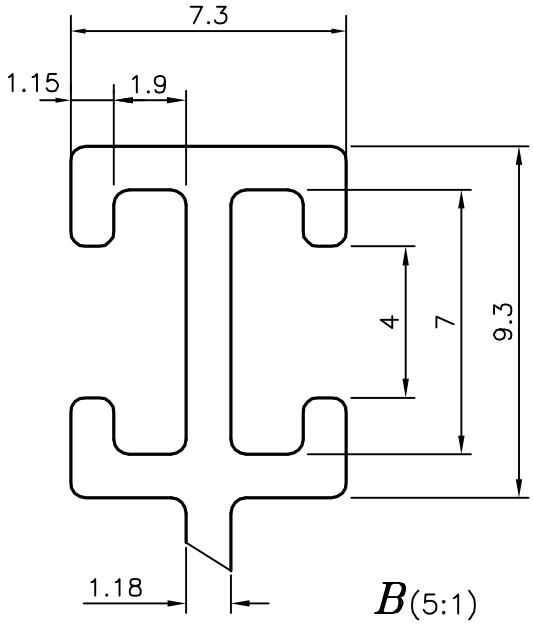

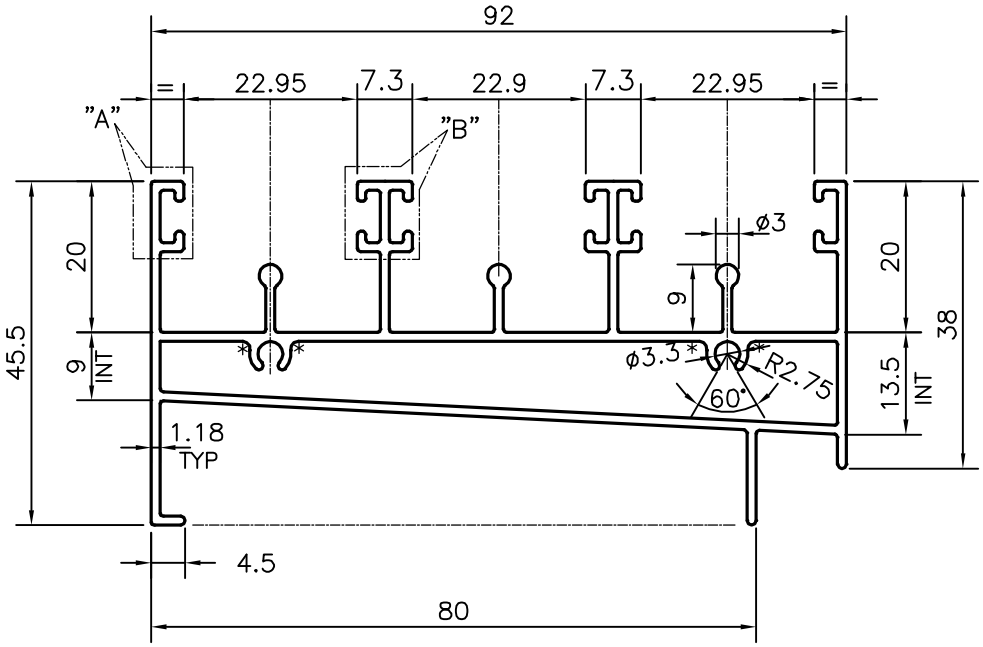

* = 1.0 RADIUS (4 PLACES)

			NAME	DATE
JINDAL SYMBOL OF QUALITY AN ISO 9001 COMPANY	*JINDAL ALUMINIUM LTD.* *BANGALORE–560073 (INDIA)*	DRAWN	J.P.KAUSHIK	13–05–2016
		CHECKED		
		APPROVED	S.S. GARG	18–05–2016

1. ALL DIMENSIONS ARE IN mm.
2. ROUND OFF ALL SHARP CORNERS WITH 0.40 mm.
3. TOLERANCES WILL BE AS PER BS:EN–755–9 UNLESS OTHERWISE SPECIFIED

SCALE	1:1
AREA mm^2	502.26
PERIMETER mm.	591.395
WEIGHT kg/m	1.356

		DRAWING No.	SECTION No.
PARTY'S NAME	PRAYOSHA ENTERPRISES LTD., UGANDA		
PARTY'S DRAWING No.	MODIFIED OF 20814	P–15857	–
ALLOY & TEMPER	6063 T6	21684	21684
DESCRIPTION	WINDOW SECTION		

ISSUE 2