P-13416-1
S4034
21696

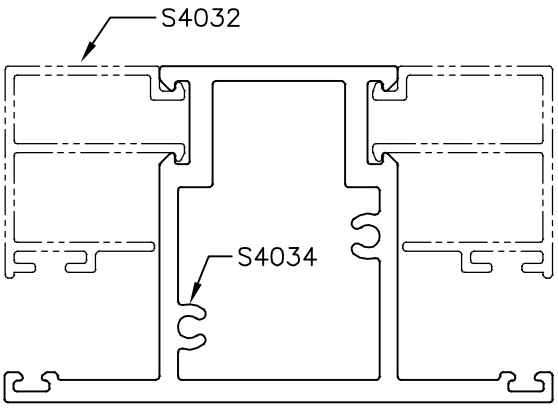

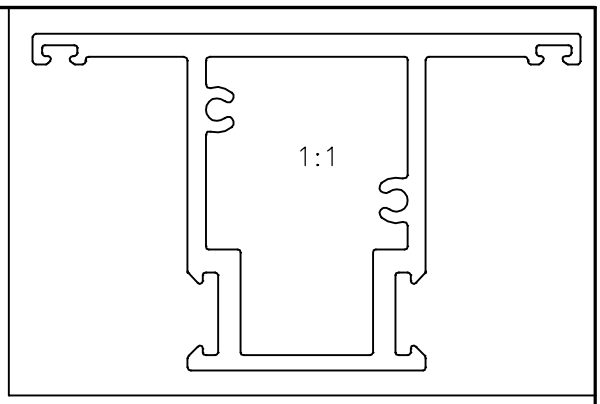

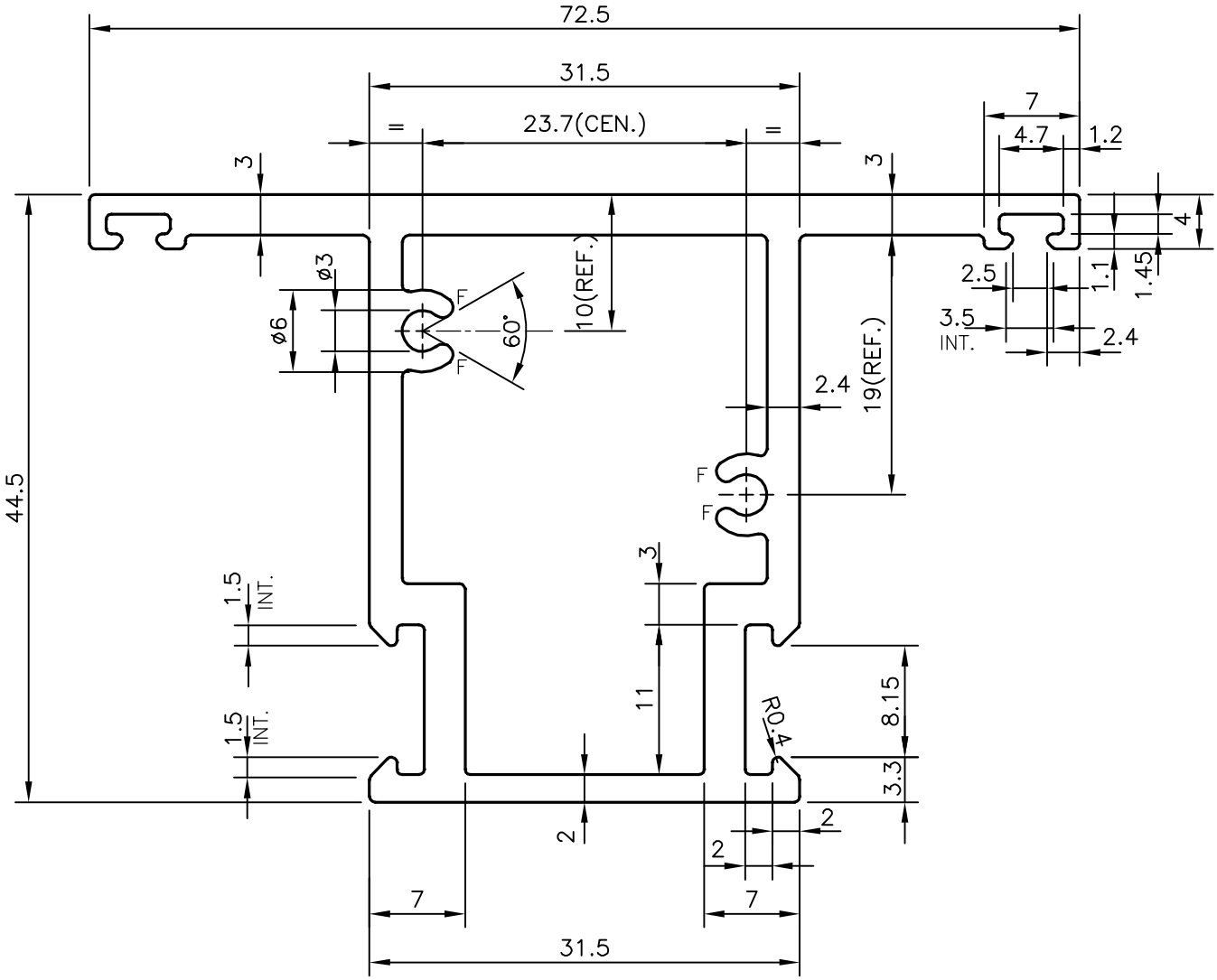

FULL RADIUS (4 PLACES)

SYMBOL OF QUALITY AN ISO 9001 COMPANY	**JINDAL ALUMINIUM LTD.** *BANGALORE-560073 (INDIA)*		NAME	DATE
		DRAWN	J.P.KAUSHIK	18-02-2014
		CHECKED		
		APPROVED	S.S.GARG	18-02-2014

1. ALL DIMENSIONS ARE IN mm.
2. ROUND OFF ALL SHARP CORNERS WITH 0.40 mm.
3. TOLERANCES WILL BE AS PER IS:6477-1983, UNLESS OTHERWISE SPECIFIED

SCALE	2:1
AREA mm^2	536.315
PERIMETER mm.	273.25
WEIGHT kg/m	1.448

PARTY'S NAME	HATIM GLAZING & CLADDING PVT LTD., MUMBAI
PARTY'S DRAWING No.	AS PER AutoCad DRAWING
ALLOY & TEMPER	HE9 WP
DESCRIPTION	WINDOW SECTION

DRAWING No.	SECTION No.
P-13416-1	–
S4034	S4034
21696	21696