P−16078
21706

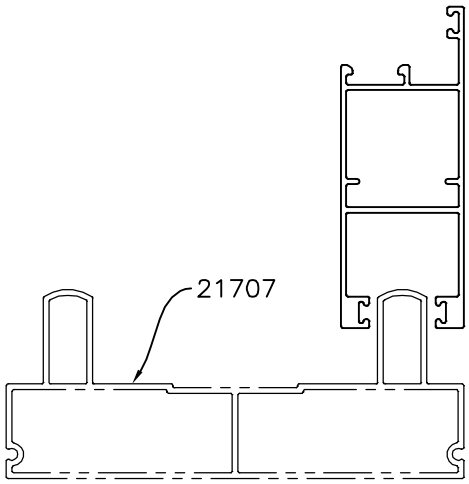

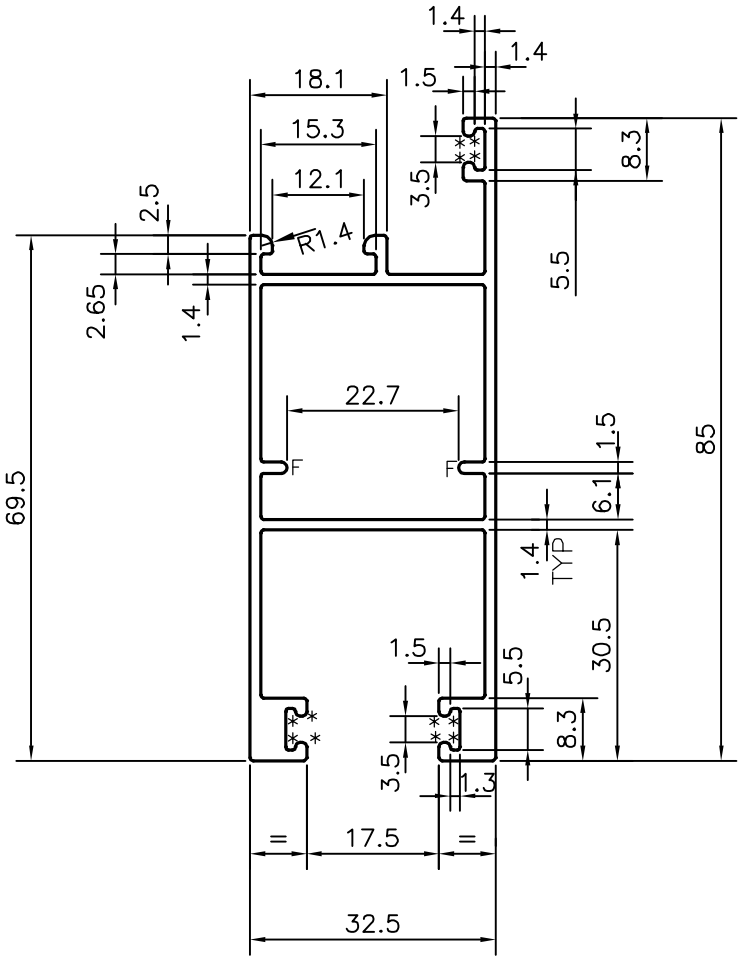

F = FULL RADIUS (2 PLACES)
* = 0.60 RADIUS (12 PLACES)

JINDAL SYMBOL OF QUALITY AN ISO 9001 COMPANY	*JINDAL ALUMINIUM LTD.* *BANGALORE−560073 (INDIA)*		NAME	DATE
		DRAWN	J.P.KAUSHIK	05−07−2016
		CHECKED		
		APPROVED	S.S. GARG	13−07−2016

1. ALL DIMENSIONS ARE IN mm.
2. ROUND OFF ALL SHARP CORNERS WITH 0.40 mm.
3. TOLERANCES WILL BE AS PER IS:6477−1983 , UNLESS OTHERWISE SPECIFIED

SCALE	1:1
AREA mm^2	411.117
PERIMETER mm.	371.727
WEIGHT kg/m	1.110

PARTY'S NAME	GENERAL CATEGORY, DELHI MARKET
PARTY'S DRAWING No.	AS PER DRAWING
ALLOY & TEMPER	HE9 WP
DESCRIPTION	WINDOW SECTION

DRAWING No.	SECTION No.
P−16078	−
21706	21706