P-16079-1
21707

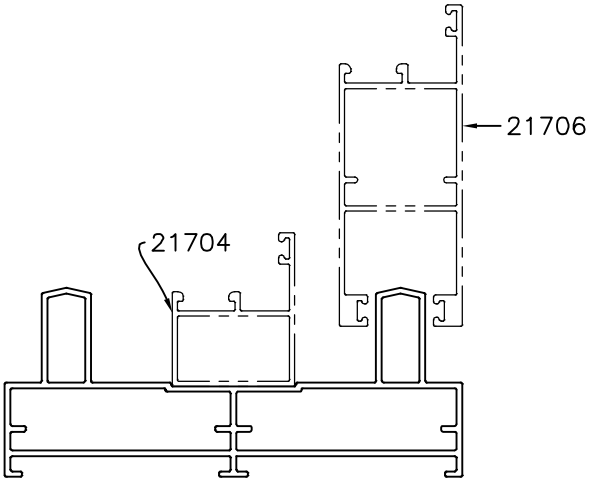

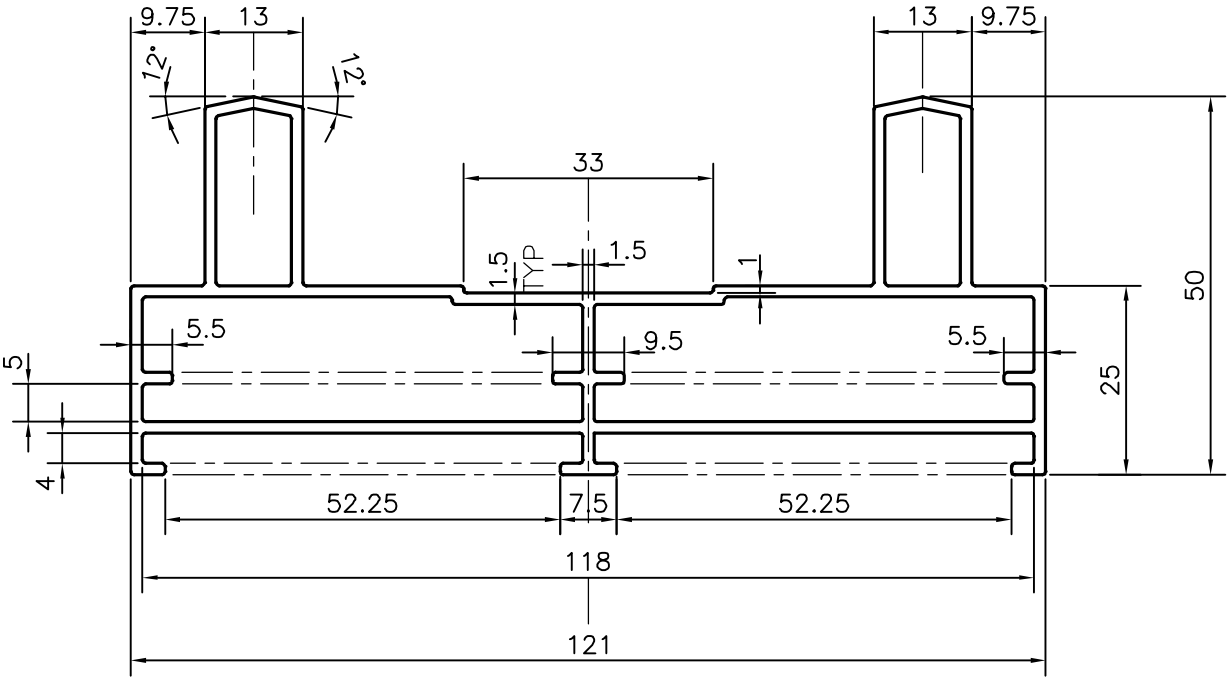

JINDAL SYMBOL OF QUALITY AN ISO 9001 COMPANY	*JINDAL ALUMINIUM LTD.* *BANGALORE-560073 (INDIA)*		NAME	DATE
		DRAWN	J.P.KAUSHIK	21-07-2016
		CHECKED		
		APPROVED	S.S. GARG	23-07-2016

1. ALL DIMENSIONS ARE IN mm.
2. ROUND OFF ALL SHARP CORNERS WITH 0.40 mm.
3. TOLERANCES WILL BE AS PER IS:6477-1983 , UNLESS OTHERWISE SPECIFIED

SCALE	1:1
AREA mm^2	679.268
PERIMETER mm.	430.037
WEIGHT kg/m	1.834

PARTY'S NAME	GENERAL CATEGORY, DELHI MARKET
PARTY'S DRAWING No.	AS PER DRAWING
ALLOY & TEMPER	HE9 WP
DESCRIPTION	WINDOW SECTION

DRAWING No.	SECTION No.
P-16079-1	–
21707	21707