P−14894
S4574
21759

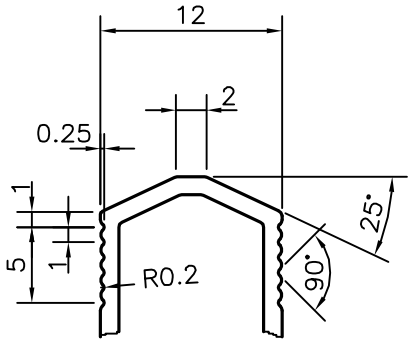

DETAIL OF "A"
SCALE 2:1

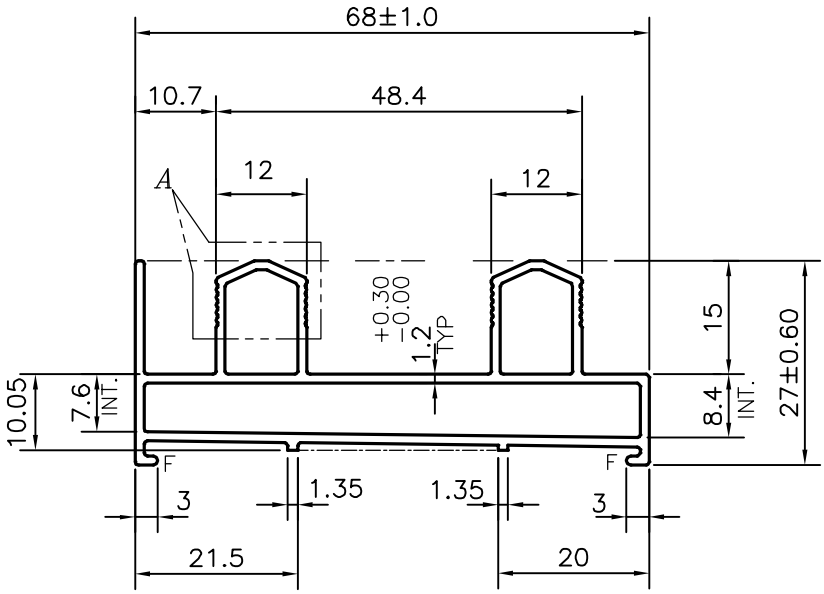

F = FULL RADIUS(2 PLACES)

			NAME	DATE
JINDAL SYMBOL OF QUALITY AN ISO 9001 COMPANY	*JINDAL ALUMINIUM LTD.* *BANGALORE−560073 (INDIA)*	DRAWN	J.P.KAUSHIK	20−07−2015
		CHECKED		
		APPROVED	S.S.GARG	18−08−2015

1. ALL DIMENSIONS ARE IN mm.
2. ROUND OFF ALL SHARP CORNERS WITH 0.40 mm.
3. TOLERANCES WILL BE AS PER IS:6477−1983 , UNLESS OTHERWISE SPECIFIED

SCALE	1:1
AREA mm^2	294.624
PERIMETER mm.	255.93
WEIGHT kg/m	0.795

PARTY'S NAME	PARAMOUNT INDUSTRIES, BANGALORE
PARTY'S DRAWING No.	P−AL1724−17LWA
ALLOY & TEMPER	HE9 WP
DESCRIPTION	WINDOW SECTION

DRAWING No.	SECTION No.
P−14894	−
S4574	S4574
21759	21759