P–15053
S4616
21774

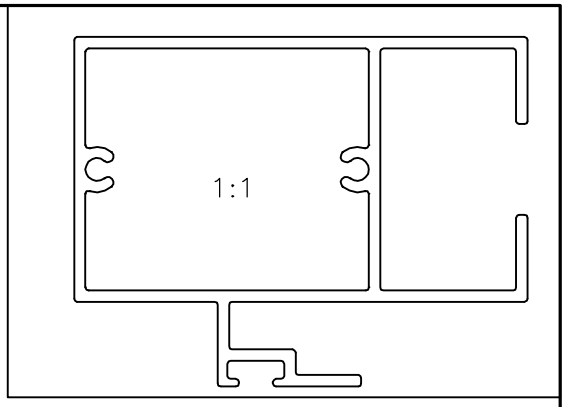

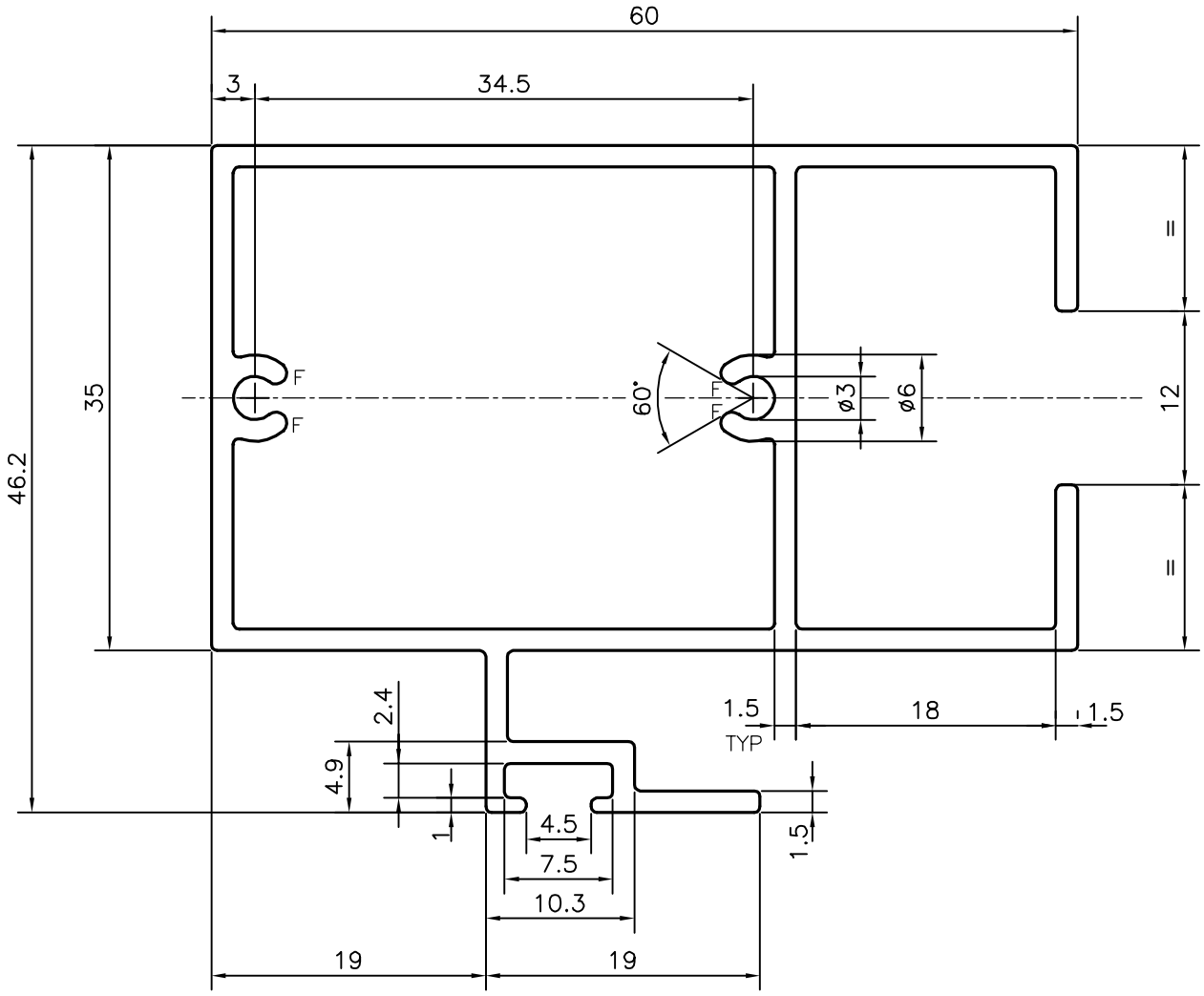

F = FULL RADIUS (4 PLACES)

			NAME	DATE
JINDAL SYMBOL OF QUALITY AN ISO 9001 COMPANY	*JINDAL ALUMINIUM LTD.* *BANGALORE–560073 (INDIA)*	DRAWN	J.P.KAUSHIK	17–08–2015
		CHECKED		
		APPROVED	S.S.GARG	26–08–2015

1. ALL DIMENSIONS ARE IN mm.
2. ROUND OFF ALL SHARP CORNERS WITH 0.40 mm.
3. TOLERANCES WILL BE AS PER IS:6477–1983 , UNLESS OTHERWISE SPECIFIED

SCALE	2:1
AREA mm^2	380.03
PERIMETER mm.	334.381
WEIGHT kg/m	1.026

		DRAWING No.	SECTION No.
PARTY'S NAME	K.S.V INFRABUILD, NEW DELHI		
PARTY'S DRAWING No.	AS PER DRAWING	P–15053	–
ALLOY & TEMPER	HE9 WP	S4616	S4616
DESCRIPTION	WINDOW SECTION	21774	21774