P–14920–1
S4575
21777

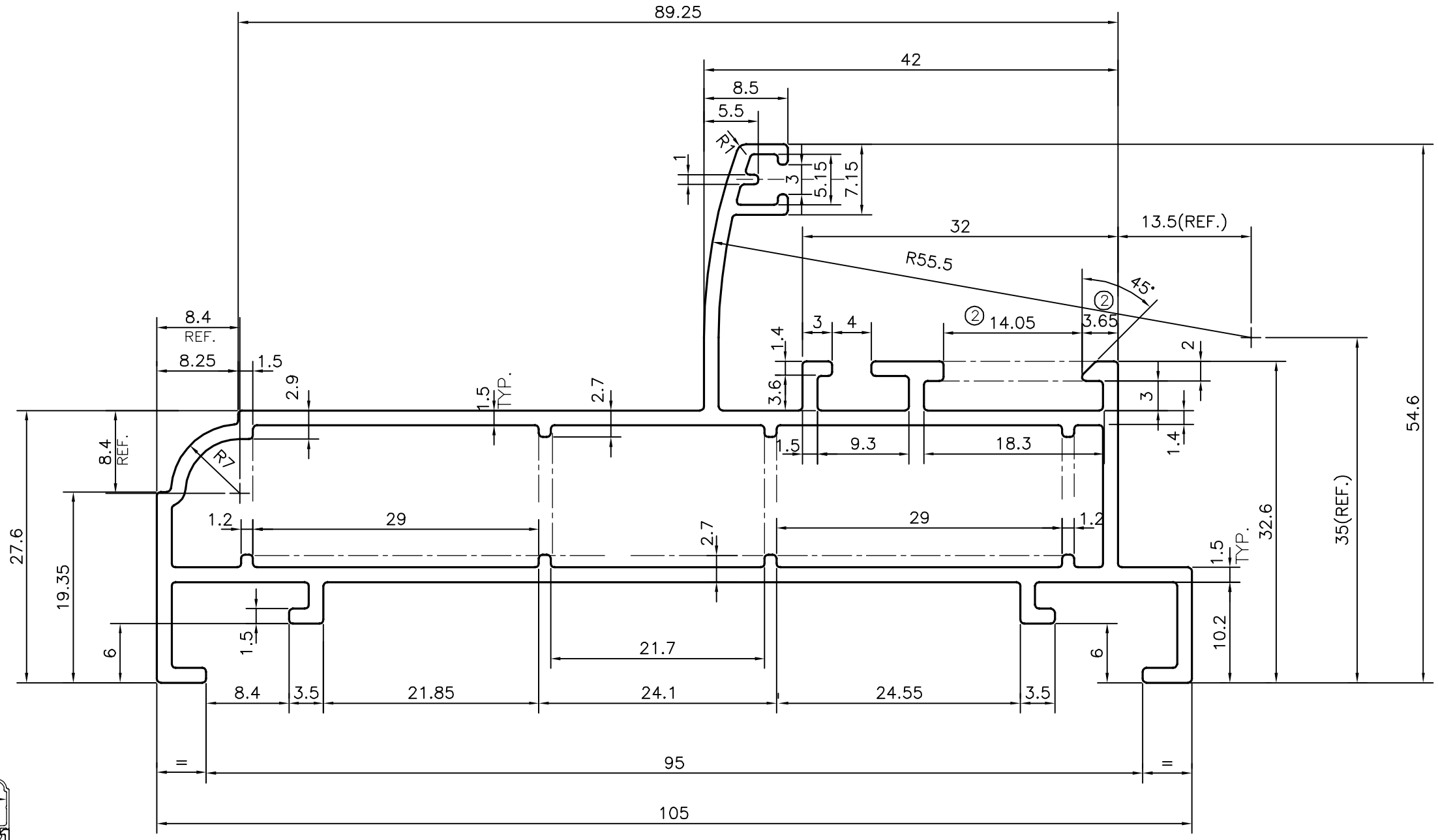

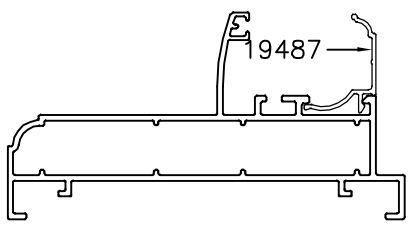

ISSUE–2

DIMENSIONS CHANGED FROM 3.5 TO 3.65 & 14.2 TO 14.05
WEIGHT ALSO CHANGED FROM 1.360 Kg/m TO 1.361 Kg/m

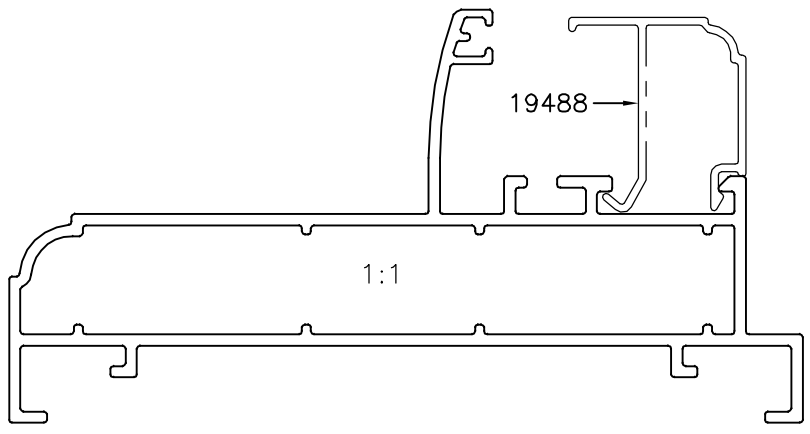

JINDAL
SYMBOL OF QUALITY
AN ISO 9001 COMPANY

JINDAL ALUMINIUM LTD.
BANGALORE–560073 (INDIA)

1. ALL DIMENSIONS ARE IN mm.
2. ROUND OFF ALL SHARP CORNERS WITH 0.40 mm.
3. TOLERANCES WILL BE AS PER IS:6477–1983 , UNLESS OTHERWISE SPECIFIED

PARTY'S NAME	KARAM DASS NIRAASH, MANDI
PARTY'S DRAWING No.	HW–1
ALLOY & TEMPER	6063 T6
DESCRIPTION	WINDOW SECTION

	NAME	DATE
DRAWN	J.P.KAUSHIK	08–09–2015
CHECKED		
APPROVED	S.S.GARG	09–09–2015
SCALE		2:1
AREA mm^2		503.982
PERIMETER mm.		438.555
WEIGHT kg/m		1.361

DRAWING No.	SECTION No.
P–14920–1	–
S4575	S4575(ISSUE–2
21777	21777