P–15702
S4915
21806

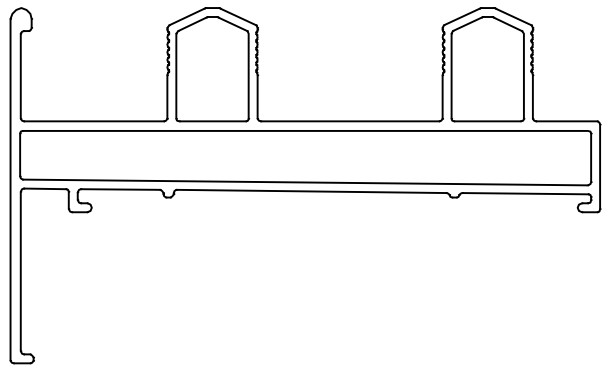

SCALE:– 1:1

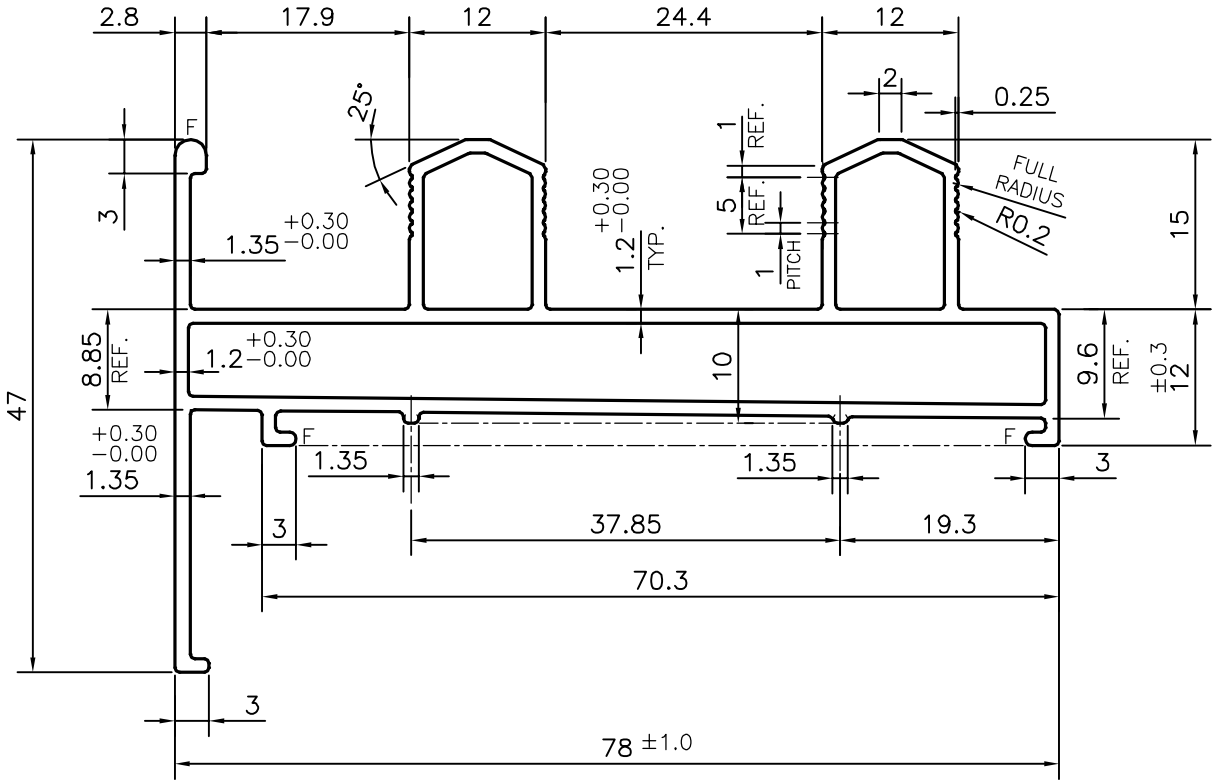

F = FULL RADIUS 3 PLACES)

			NAME	DATE
JINDAL SYMBOL OF QUALITY AN ISO 9001 COMPANY	JINDAL ALUMINIUM LTD. BANGALORE–560073 (INDIA)	DRAWN	PARVESH	21–03–2016
		CHECKED		
		APPROVED	S.S. GARG	20–04–2016

1. ALL DIMENSIONS ARE IN mm.
2. ROUND OFF ALL SHARP CORNERS WITH 0.40 mm.
3. TOLERANCES WILL BE AS PER IS:6477–1983 , UNLESS OTHERWISE SPECIFIED

SCALE	1.5:1
AREA mm^2	358.223
PERIMETER mm.	327.436
WEIGHT kg/m	0.967

PARTY'S NAME	PARAMOUNT INDUSTRIES, BANGALORE
PARTY'S DRAWING No.	P–AL172414L3
ALLOY & TEMPER	HE9 WP
DESCRIPTION	WINDOW SECTION

DRAWING No.	SECTION No.
P–15702	–
S4915	S4915
21806	21806