P−18294
21820

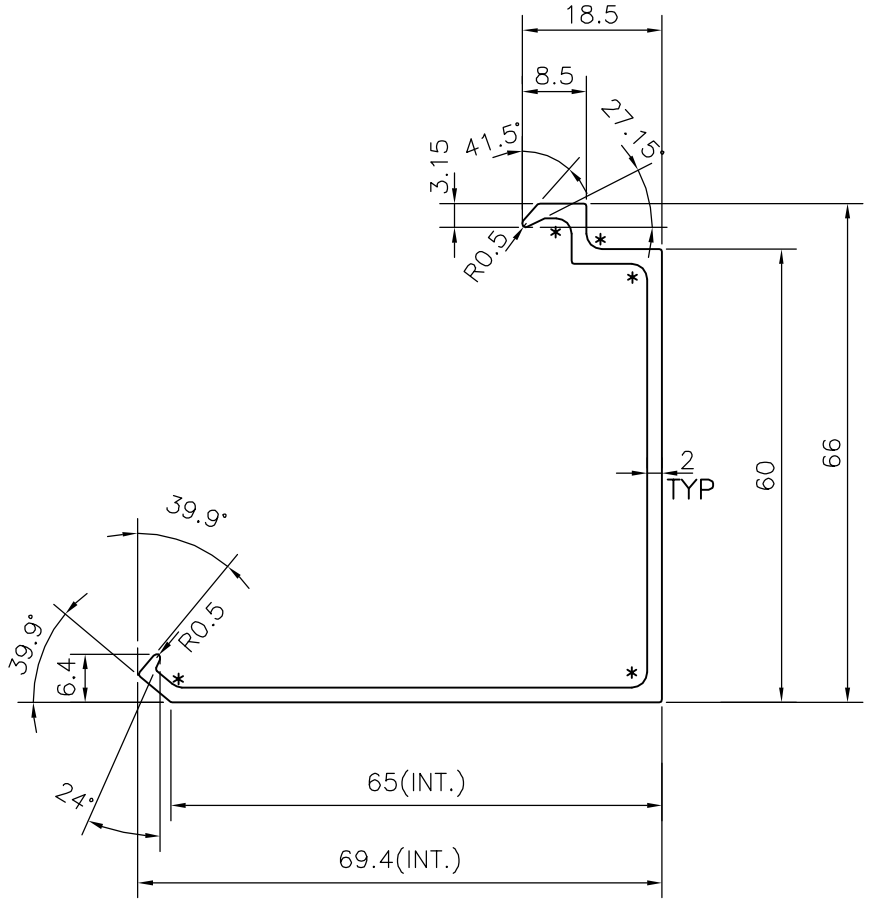

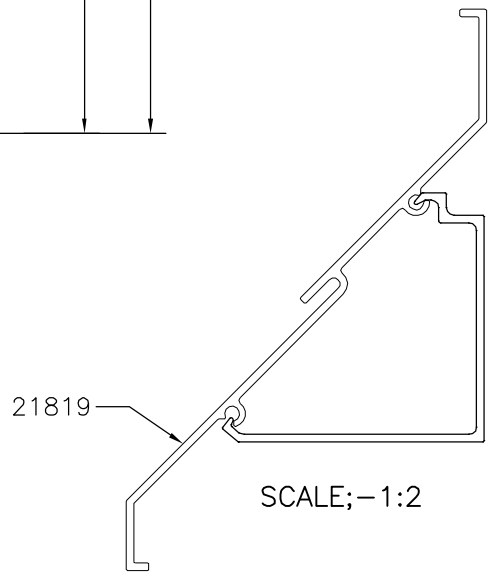

SCALE;−1:2

* = 2.0 RADIUS (5 PLACES)

JINDAL SYMBOL OF QUALITY AN ISO 9001 COMPANY	*JINDAL ALUMINIUM LTD.* *BANGALORE−560073 (INDIA)*		NAME	DATE
		DRAWN	J.P.KAUSHIK	04−06−2018
		CHECKED		
		APPROVED	*B.NATARAJA*	29−09−2018
1. ALL DIMENSIONS ARE IN mm. 2. ROUND OFF ALL SHARP CORNERS WITH 0.40 mm. 3. TOLERANCES WILL BE AS PER BS:EN−755−9, UNLESS OTHERWISE SPECIFIED		SCALE		1:1
		AREA mm^2		305.596
		PERIMETER mm.		303.243
PARTY'S NAME	IDMC PTE LTD., SINGAPORE	WEIGHT kg/m		0.825
		DRAWING No.		SECTION No.
PARTY'S DRAWING No.	IDMC/HDB/0101/ALP (PART−B)	P−18294		−
		21820		21820
ALLOY & TEMPER	6063 T6			
DESCRIPTION	LOUVER SECTION			