P−18899
21827

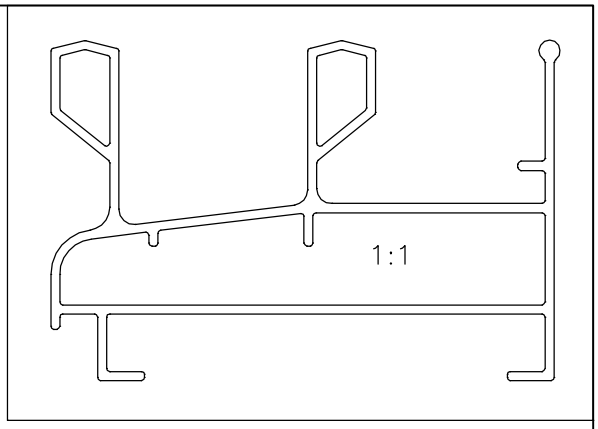

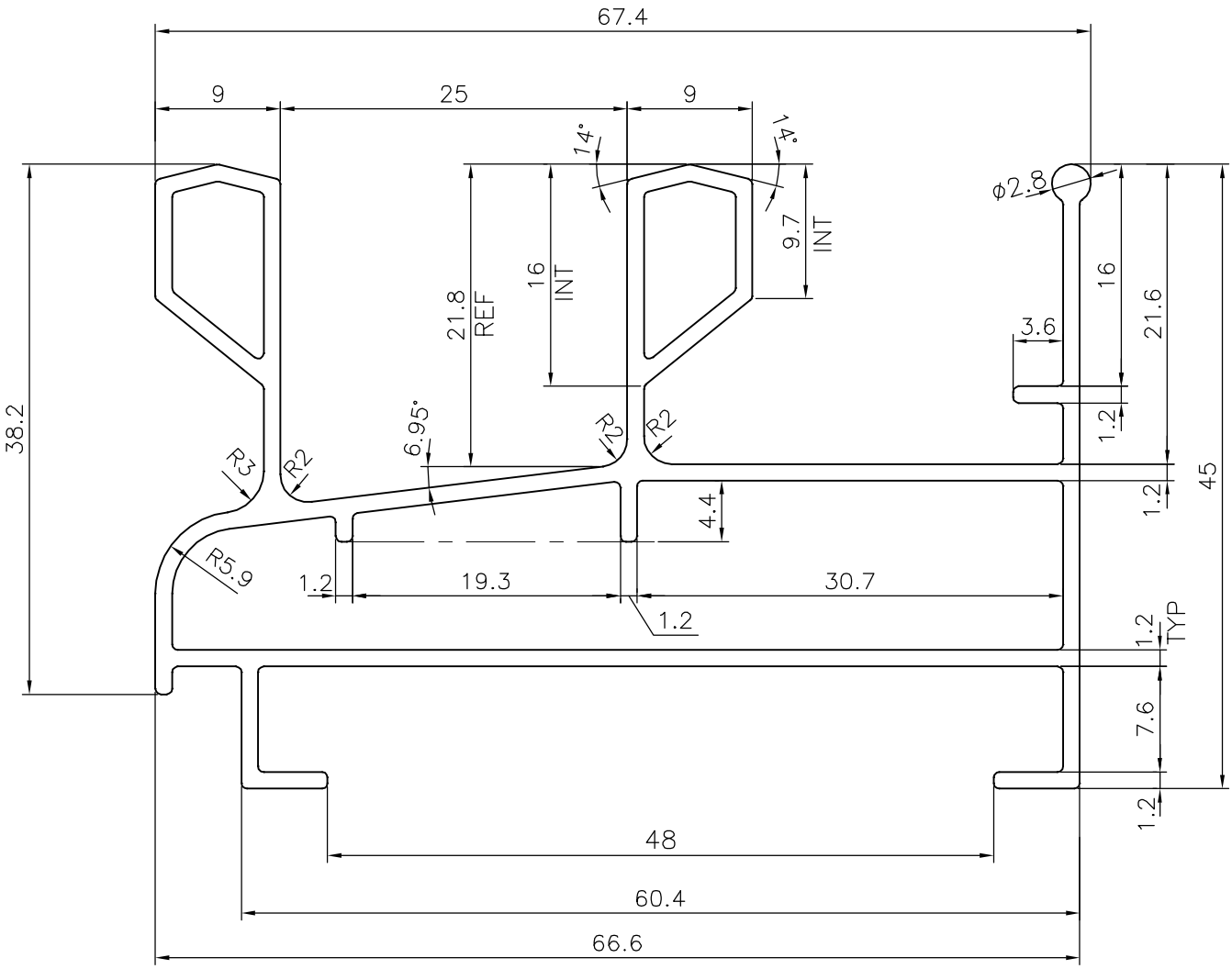

			NAME	DATE
JINDAL SYMBOL OF QUALITY AN ISO 9001 COMPANY	*JINDAL ALUMINIUM LTD.* *BANGALORE−560073 (INDIA)*	DRAWN	J.P.KAUSHIK	22−11−2018
		CHECKED		
		APPROVED	B.NATARAJA	07−12−2018

1. ALL DIMENSIONS ARE IN mm.
2. ROUND OFF ALL SHARP CORNERS WITH 0.40 mm.
3. TOLERANCES WILL BE AS PER IS:6477−1983 , UNLESS OTHERWISE SPECIFIED

SCALE	2:1
AREA mm^2	375.291
PERIMETER mm.	371.54
WEIGHT kg/m	1.013

PARTY'S NAME	GENERAL CATEGORY, MUMBAI MARKET
PARTY'S DRAWING No.	AS PER DRAWING
ALLOY & TEMPER	6063 T6
DESCRIPTION	WINDOW SECTION

DRAWING No.	SECTION No.
P−18899	−
21827	21827