P–19105	
21847	

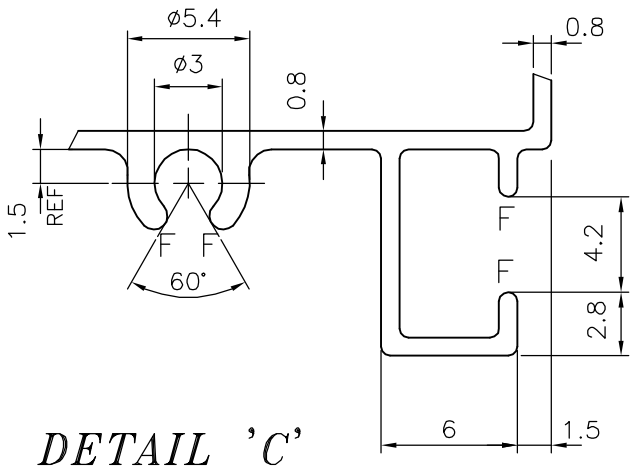

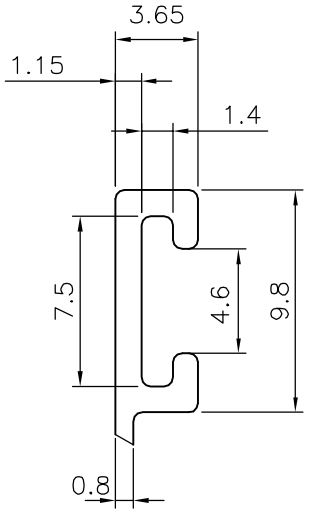

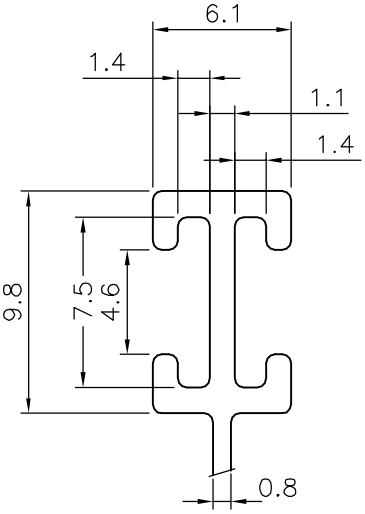

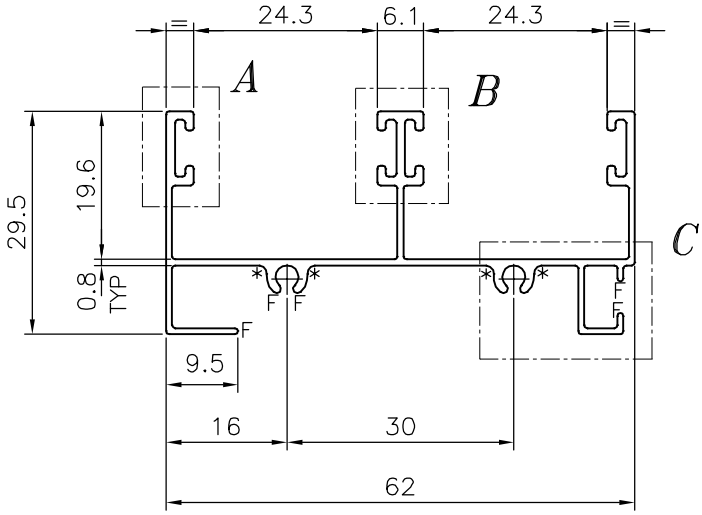

F = FULL RADIUS (7 PLACES)
* = 1.0 RADIUS (4 PLACES)

			NAME	DATE
SYMBOL OF QUALITY AN ISO 9001 COMPANY	JINDAL ALUMINIUM LTD. BANGALORE–560073 (INDIA)	DRAWN	J.P.KAUSHIK	06–02–2019
		CHECKED		
		APPROVED	B.NATARAJA	08–02–2019

1. ALL DIMENSIONS ARE IN mm.
2. ROUND OFF ALL SHARP CORNERS WITH 0.40 mm.
3. TOLERANCES WILL BE AS PER IS:3965–1981 , UNLESS OTHERWISE SPECIFIED

SCALE	1:1
AREA mm^2	191.562
PERIMETER mm.	393.803
WEIGHT kg/m	0.517

		DRAWING No.	SECTION No.
PARTY'S NAME	GENERAL CATEGORY, KOLKATTA MARKET		
PARTY'S DRAWING No.	LIGHTER OF 20987	P–19105	–
ALLOY & TEMPER	HE9 WP	21847	21847
DESCRIPTION	WINDOW SECTION		