P−16196
X2047
21852

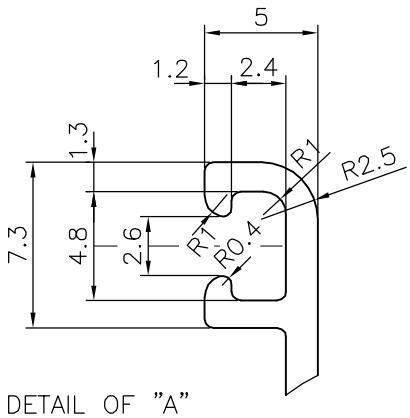

DETAIL OF "A"
SCALE 3:1

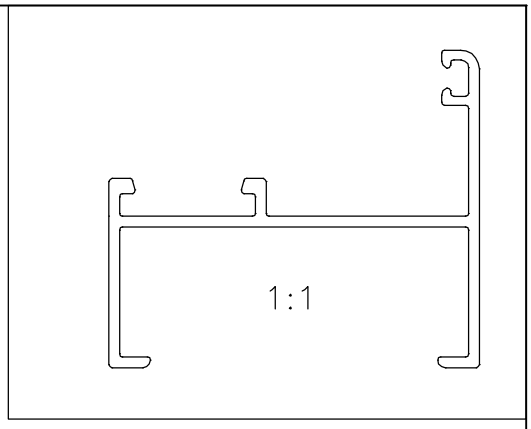

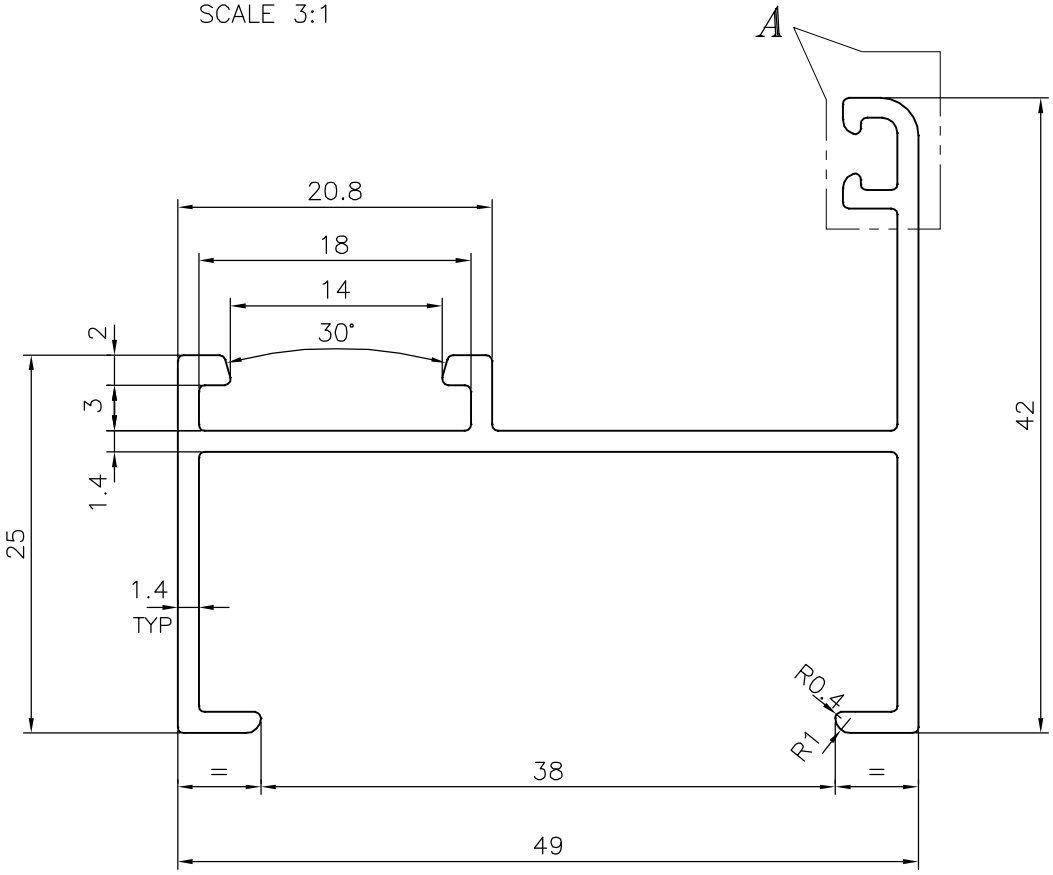

JINDAL SYMBOL OF QUALITY AN ISO 9001 COMPANY	*JINDAL ALUMINIUM LTD.* *BANGALORE−560073 (INDIA)*		NAME	DATE
		DRAWN	J.P.KAUSHIK	11−08−2016
		CHECKED		
		APPROVED	S.S. GARG	22−08−2016

1. ALL DIMENSIONS ARE IN mm.
2. ROUND OFF ALL SHARP CORNERS WITH 0.40 mm.
3. TOLERANCES WILL BE AS PER IS:3965−1981 UNLESS OTHERWISE SPECIFIED

SCALE	2:1
AREA mm^2	194.062
PERIMETER mm.	273.876
WEIGHT kg/m	0.524

PARTY'S NAME	HATIM GLAZING & CLADDING PVT. LTD., MUMBAI
PARTY'S DRAWING No.	AS PER AutoCAD DRAWING
ALLOY & TEMPER	6063 T6
DESCRIPTION	WINDOW SECTION

DRAWING No.	SECTION No.
P−16196	−
X2047	X2047
21852	21852