P-16200
X2051
21856

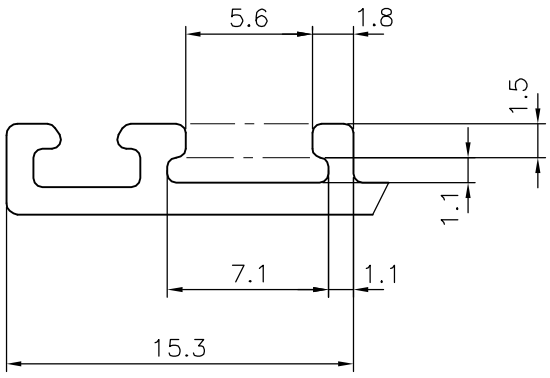

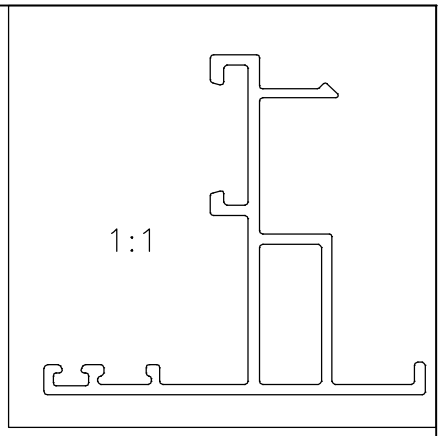

DETAIL OF "A"
SCALE 3:1

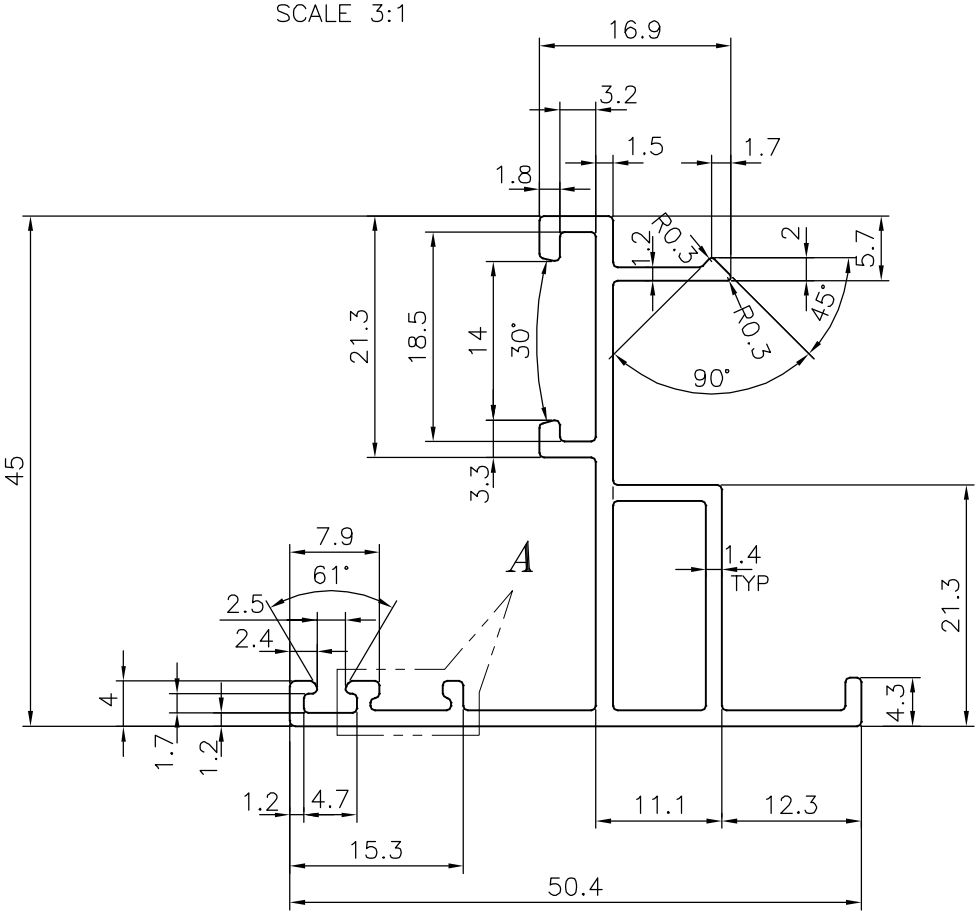

JINDAL SYMBOL OF QUALITY AN ISO 9001 COMPANY	*JINDAL ALUMINIUM LTD.* *BANGALORE-560073 (INDIA)*		NAME	DATE
		DRAWN	J.P.KAUSHIK	12-08-2016
		CHECKED		
		APPROVED	S.S. GARG	22-08-2016
1. ALL DIMENSIONS ARE IN mm. 2. ROUND OFF ALL SHARP CORNERS WITH 0.40 mm. 3. TOLERANCES WILL BE AS PER IS:6477-1983 UNLESS OTHERWISE SPECIFIED		SCALE		1.5:1
		AREA mm^2		226.704
		PERIMETER mm.		261.811
PARTY'S NAME	HATIM GLAZING & CLADDING PVT. LTD., MUMBAI	WEIGHT kg/m		0.612
		DRAWING No.		SECTION No.
PARTY'S DRAWING No.	AS PER AutoCAD DRAWING	P-16200		-
		X2051		X2051
ALLOY & TEMPER	6063 T6	21856		21856
DESCRIPTION	WINDOW SECTION			