P−19210−1
21879

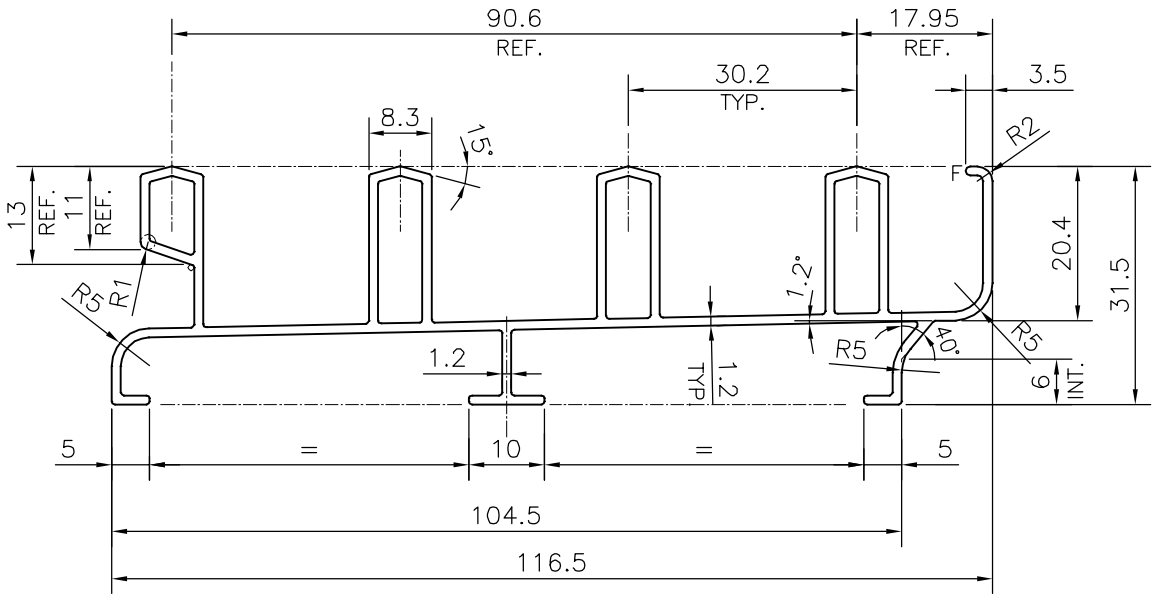

F = FULL RADIUS (1 PLACE)

JINDAL SYMBOL OF QUALITY AN ISO 9001 COMPANY	*JINDAL ALUMINIUM LTD.* *BANGALORE−560073 (INDIA)*		NAME	DATE
		DRAWN	*J.P.KAUSHIK*	12−03−2019
		CHECKED		
		APPROVED	*B.NATARAJA*	08−07−2019
1. ALL DIMENSIONS ARE IN mm. 2. ROUND OFF ALL SHARP CORNERS WITH 0.4 mm. 3. TOLERANCES WILL BE AS PER IS:6477−1983 , UNLESS OTHERWISE SPECIFIED		SCALE		1:1
		AREA mm^2		428.892
		PERIMETER mm.		525.48
PARTY'S NAME	GENERAL CATEGORY, MUMBAI MARKET	WEIGHT kg/m		1.158
		DRAWING No.		SECTION No.
PARTY'S DRAWING No.	AS PER DRAWING	P−19210−1		−
		21879		21879
ALLOY & TEMPER	HE9 WP			
DESCRIPTION	WINDOW SECTION			