P–20275
21891

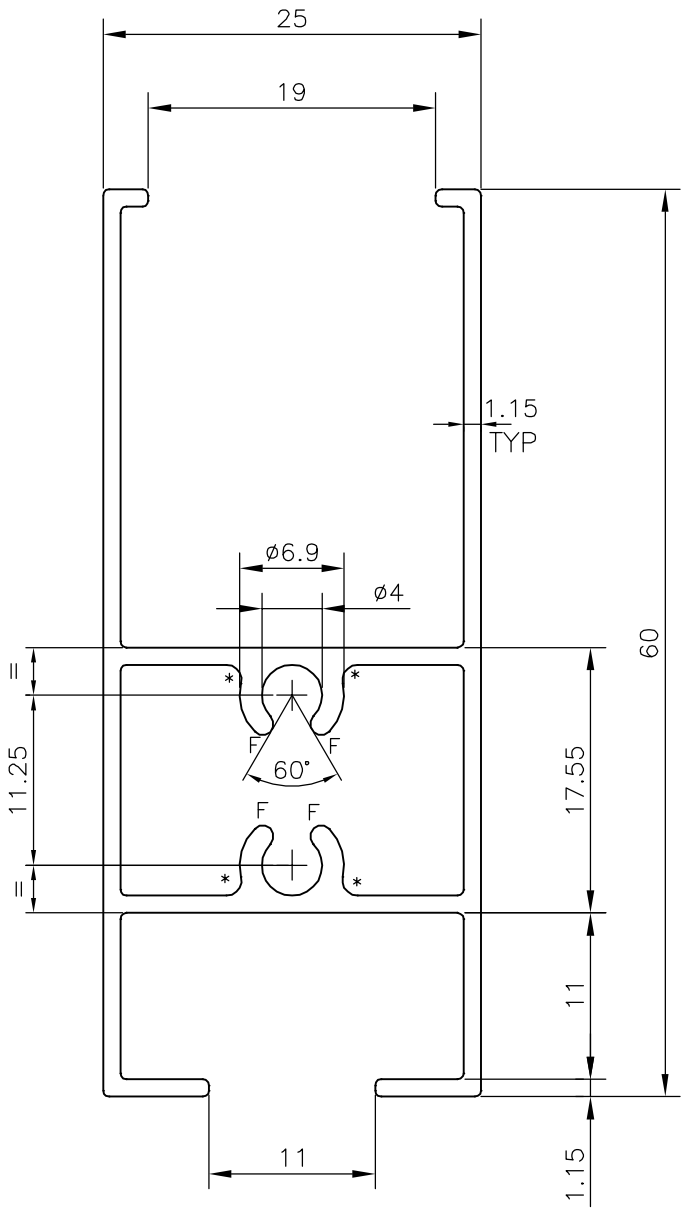

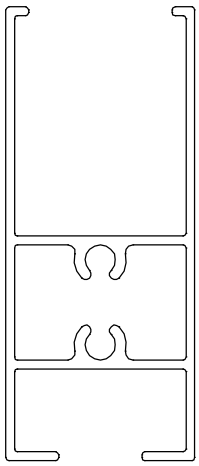

SCALE 1:1

F = FULL RADIUS (4 PLACES)

* = 1.0 RADIUS (4 PLACES)

TOLERANCES ON OVERALL DIMENSIONS OF HOLLOW SECTIONS

UPTO 20.0mm – ±0.30	UPTO 80.0mm – ±0.70	UPTO 180.0mm – ±1.27	1. STRAIGHTNESS=1.7mm/M
UPTO 30.0mm – ±0.38	UPTO 100.0mm – ±0.80	UPTO 200.0mm – ±1.40	2. TWIST=1.7mm/M
UPTO 40.0mm – ±0.45	UPTO 120.0mm – ±0.90	UPTO 225.0mm – ±1.52	3. ANGULARITY= ±2°
UPTO 50.0mm – ±0.52	UPTO 140.0mm – ±1.00		4. FLATNESS =0.006xWIDTH
UPTO 60.0mm – ±0.60	UPTO 160.0mm – ±1.14		

JINDAL

SYMBOL OF QUALITY
AN ISO 9001 COMPANY

JINDAL ALUMINIUM LTD.

BANGALORE–560073 (INDIA)

	NAME	DATE
DRAWN	J.P.KAUSHIK	19–10–2019
CHECKED		
APPROVED	*B.NATARAJA*	26–10–2019

1. ALL DIMENSIONS ARE IN mm.
2. ROUND OFF ALL SHARP CORNERS WITH 0.40 mm.
3. TOLERANCES WILL BE AS PER IS:6477–1983 UNLESS OTHERWISE SPECIFIED

SCALE	2:1
AREA mm^2	238.769
PERIMETER mm.	282.266
WEIGHT kg/m	0.645

PARTY'S NAME	AAKASH EXTRUSION PVT. LTD., MUMBAI
PARTY'S DRAWING No.	MODIFIED OF 21556
ALLOY & TEMPER	HE9 WP
DESCRIPTION	WINDOW SECTION

DRAWING No.	SECTION No.
P–20275	
21891	21891