P−17339
S5461
21902

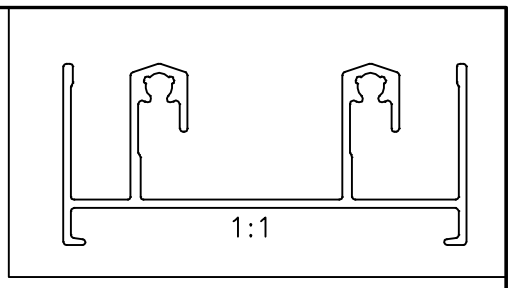

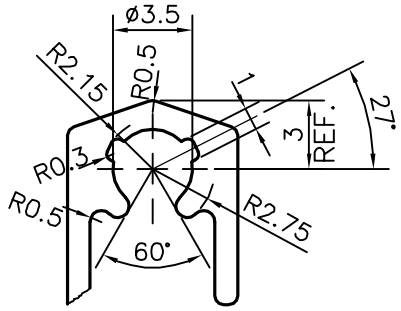

DETAIL"A"
SCALE 3:1

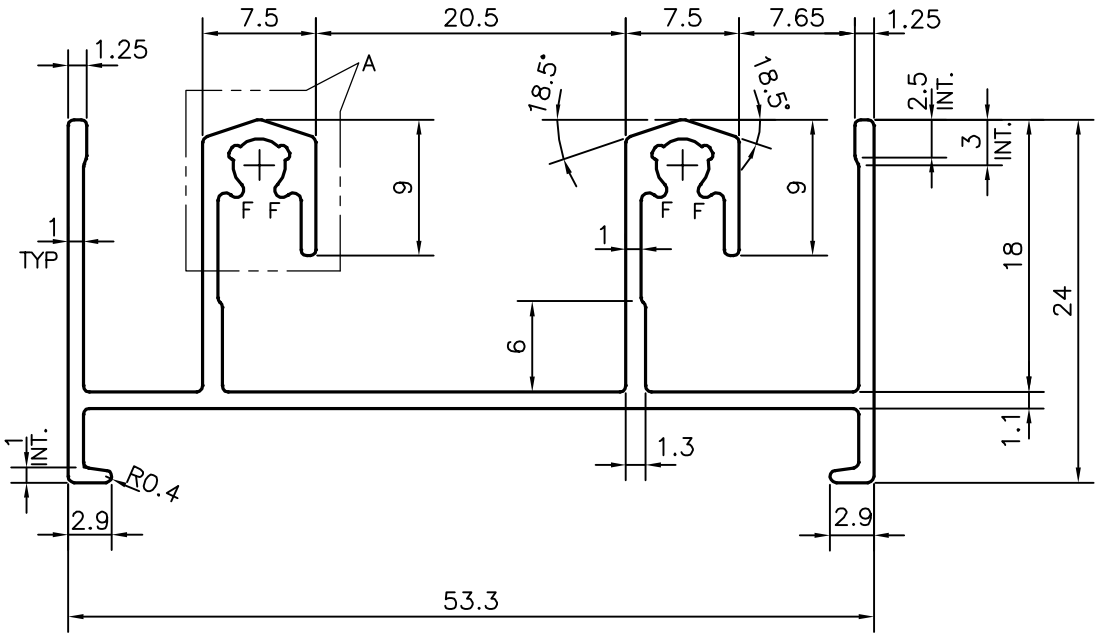

Q01107

F = FULL RADIUS (4 PLACES)

TOLERANCES ON OVERALL WIDTHS & WIDTHS ACROSS FLATS OF BARS, & REGULAR SECTIONS

UPTO 6.40mm − ±0.20	UPTO 32.0mm − ±0.38	UPTO 120.0mm − ±0.85	UPTO 320.00mm − ±1.70
UPTO 10.0mm − ±0.23	UPTO 50.0mm − ±0.46	UPTO 160.0mm − ±1.02	
UPTO 12.0mm − ±0.25	UPTO 60.0mm − ±0.53	UPTO 200.0mm − ±1.14	
UPTO 16.0mm − ±0.28	UPTO 80.0mm − ±0.69	UPTO 250.0mm − ±1.40	
UPTO 25.0mm − ±0.30	UPTO 100.0mm − ±0.75	UPTO 300.0mm − ±1.65	

JINDAL
SYMBOL OF QUALITY
AN ISO 9001 COMPANY

JINDAL ALUMINIUM LTD.
BANGALORE−560073 (INDIA)

	NAME	DATE
DRAWN	J.P.KAUSHIK	20−07−2017
CHECKED		
APPROVED	B.NATARAJA	28−06−2017

1. ALL DIMENSIONS ARE IN mm.
2. ROUND OFF ALL SHARP CORNERS WITH 0.40 mm.
3. TOLERANCES WILL BE AS PER,IS:3965−1981 UNLESS OTHERWISE SPECIFIED

SCALE	2:1
AREA mm^2	190.203
PERIMETER mm.	331.494
WEIGHT kg/m	0.514

PARTY'S NAME	EASY WINDOW SYSTEMS, BANASKANTHA
PARTY'S DRAWING No.	VENTO−2201−MV01−2−TRACK TOP & BOTTOM
ALLOY & TEMPER	6063 T6
DESCRIPTION	WINDOW SECTION−2−TRACK TOP &BOTTOM

DRAWING No.	SECTION No.
P−17339	−
S5461	S5461
21902	21902