P–19787–2
S6429
21912

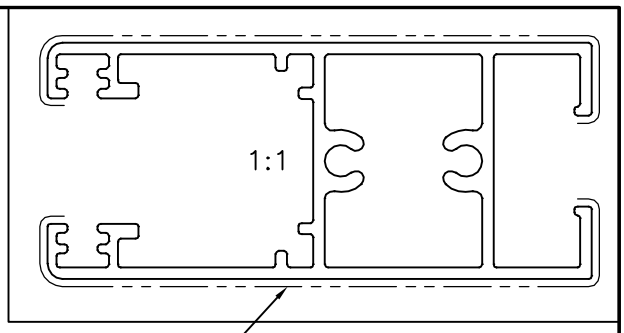

EXPOSED SURFACE

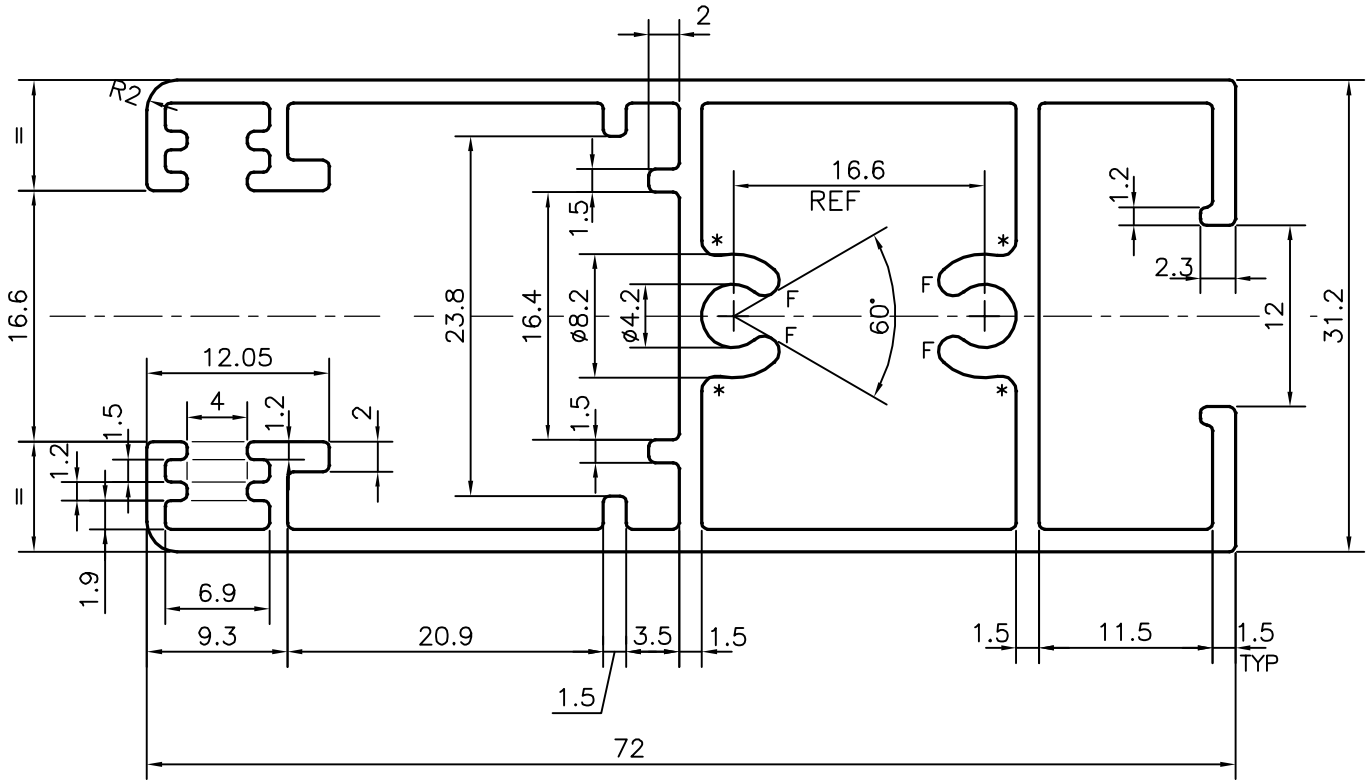

F = FULL RADIUS (4 PLACES)

* = 1.0 RADIUS (4 PLACES)

SYMBOL OF QUALITY
AN ISO 9001 COMPANY

JINDAL ALUMINIUM LTD.

BANGALORE–560073 (INDIA)

	NAME	DATE
DRAWN	J.P.KAUSHIK	06–08–2019
CHECKED		
APPROVED	B.NATARAJA	12–08–2019

1. ALL DIMENSIONS ARE IN mm.
2. ROUND OFF ALL SHARP CORNERS WITH 0.40 mm.
3. TOLERANCES WILL BE AS PER IS:6477–1983 , UNLESS OTHERWISE SPECIFIED

SCALE	2:1
AREA mm^2	435.394
PERIMETER mm.	421.379
WEIGHT kg/m	1.176

PARTY'S NAME	CITY CORPORATION LTD., PUNE
PARTY'S DRAWING No.	AS PER DRAWING & REQUIREMENT
ALLOY & TEMPER	6063 T6
DESCRIPTION	WINDOW SECTION

DRAWING No.	SECTION No.
P–19787–2	–
S6429	S6429
21912	21912