P–6923	
22071	
–	

SCALE 1:1

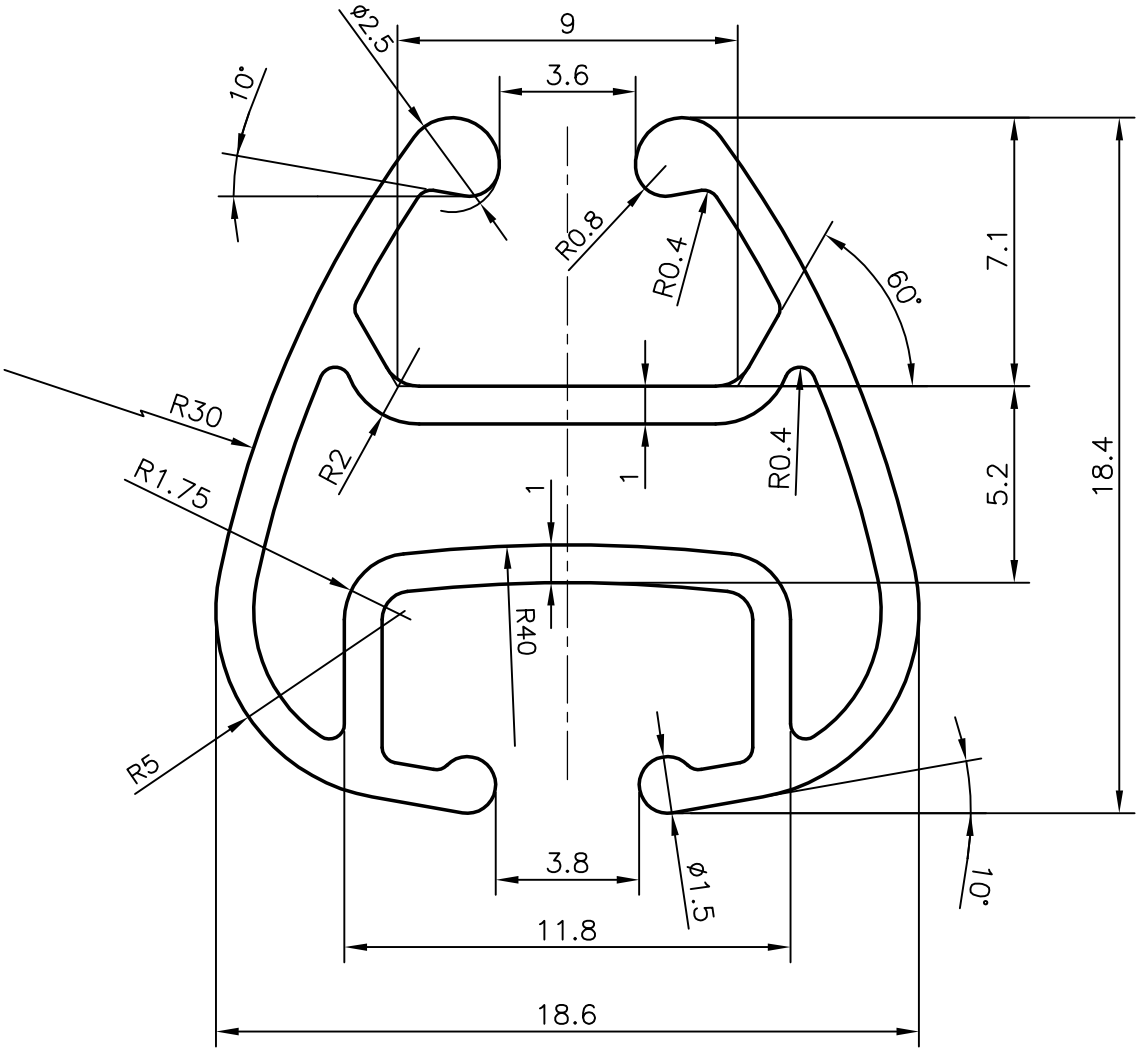

NOTE:–

1. GENERAL WALL THICKNESS = 1.0 mm

			NAME	DATE
JINDAL SYMBOL OF QUALITY AN ISO 9001 COMPANY	*JINDAL ALUMINIUM LTD.* *BANGALORE–560073 (INDIA)*	DRAWN	PRASANNA.H.	04–01–2007
		CHECKED		
		APPROVED		

1. ALL DIMENSIONS ARE IN mm.
2. ROUND OFF ALL SHARP CORNERS WITH 0.40 mm.
3. TOLERANCES WILL BE AS PER IS:6477–1983 UNLESS OTHERWISE SPECIFIED

SCALE	5:1
AREA mm^2	86.921
PERIMETER mm.	105.847
WEIGHT kg/m	0.235

		DRAWING No.	SECTION No.
PARTY'S NAME	WALLTRACTS (INDIA) PVT. LTD., NEW DELHI		
PARTY'S DRAWING No.	AS PER SAMPLE	P–6923	–
ALLOY & TEMPER	HE9 WP	22071	22071
DESCRIPTION	VENETIAN BLIND SECTION	–	–