| | |
|---|---|
| 8190 | |
| 22119 | |
| | |

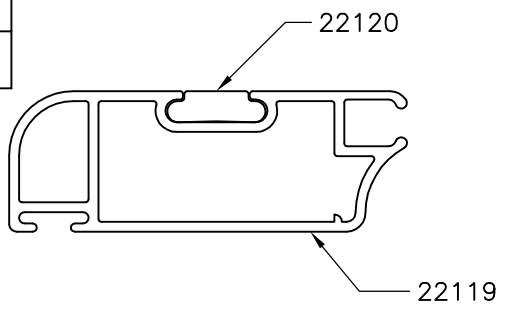


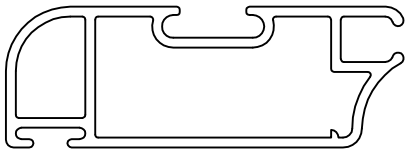

SCALE 1:1

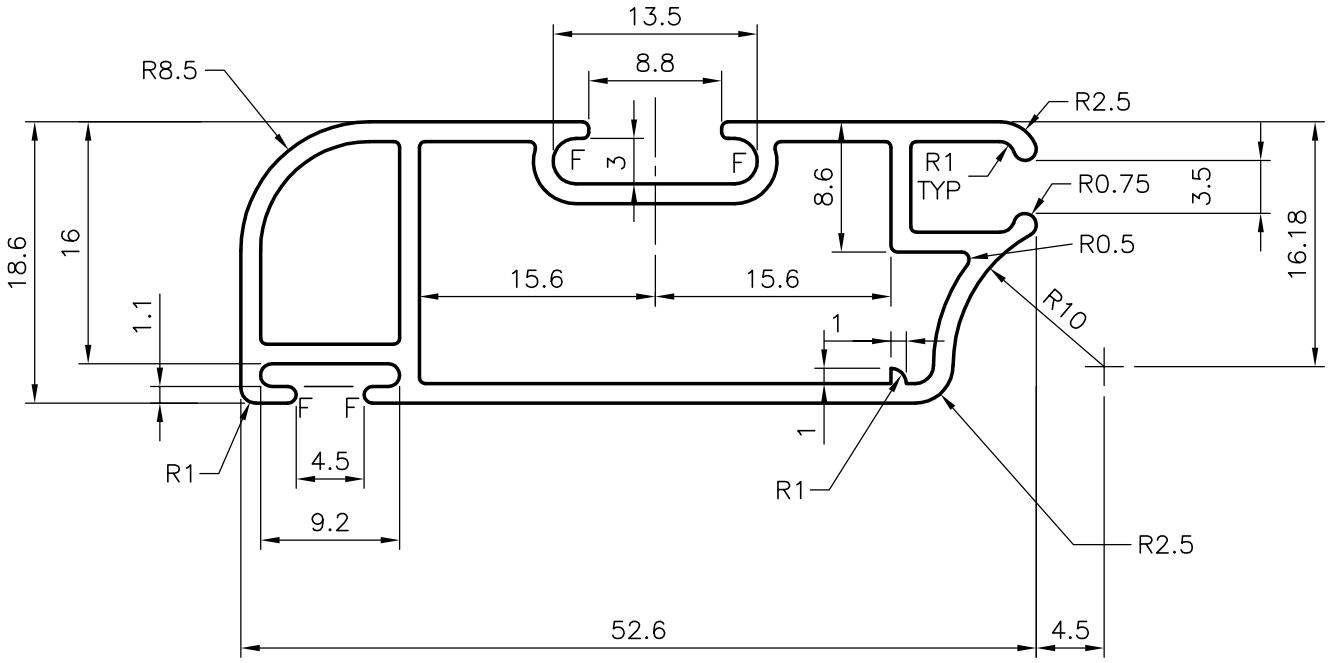


NOTE:–

1. F=FULL RADII (4–PLCS)

GENERAL WALL THICKNESS :–1.3 mm

| | | | | |
|---|---|---|---|---|
| JINDAL<br>SYMBOL OF QUALITY<br>AN ISO 9002 COMPANY | *JINDAL ALUMINIUM LTD.*<br>*BANGALORE–560073 (INDIA)* | | NAME | DATE |
| | | DRAWN | RANGASWAMY | 12–05–01 |
| | | CHECKED | | |
| 1. ALL DIMENSIONS ARE IN mm.<br>2. ROUND OFF ALL SHARP CORNERS WITH 0.40 mm.<br>3. TOLERANCES WILL BE AS PER B.S 1474–1987 UNLESS OTHERWISE SPECIFIED | | APPROVED | | |
| | | SCALE | 2:1 & 1:1 | |
| PARTY'S NAME | TOM ALUMINIUM L.L.C., U.A.E | WEIGHT kg/m | 0.594 | |
| PARTY'S DRAWING No. | AS PER SAMPLE | SECTION No. | 22119 | |
| ALLOY & TEMPER | 6063 T6 | DRAWING No. | 22119 | |
| DESCRIPTION | KITCHEN CABENET PROFILE | | | |