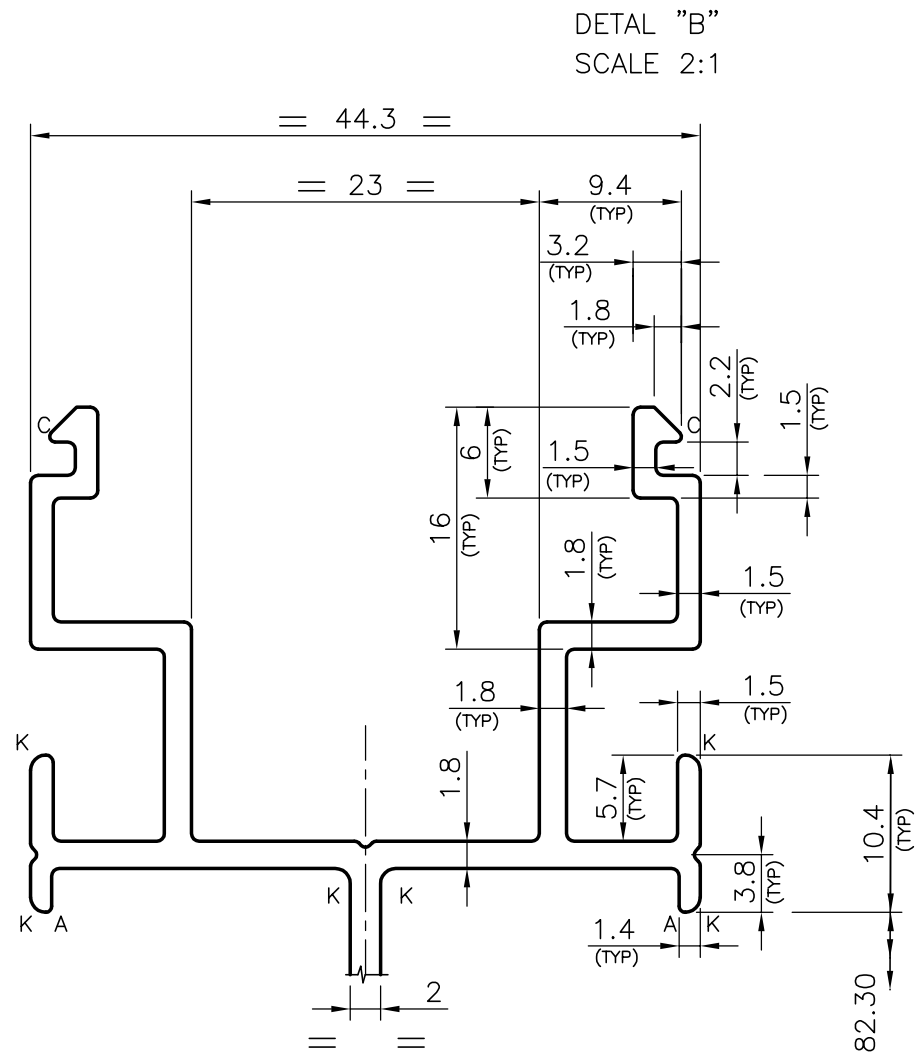

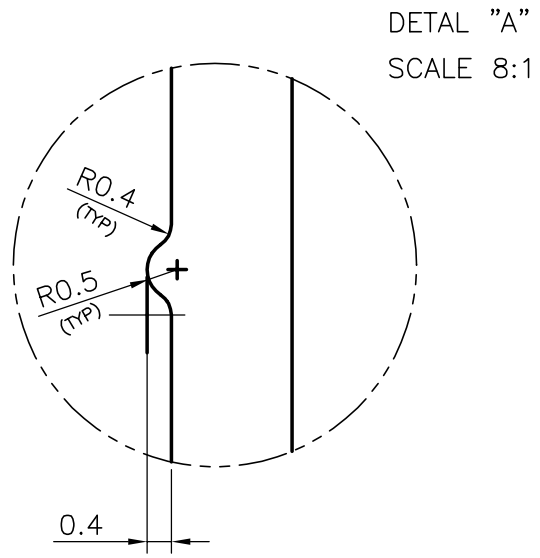

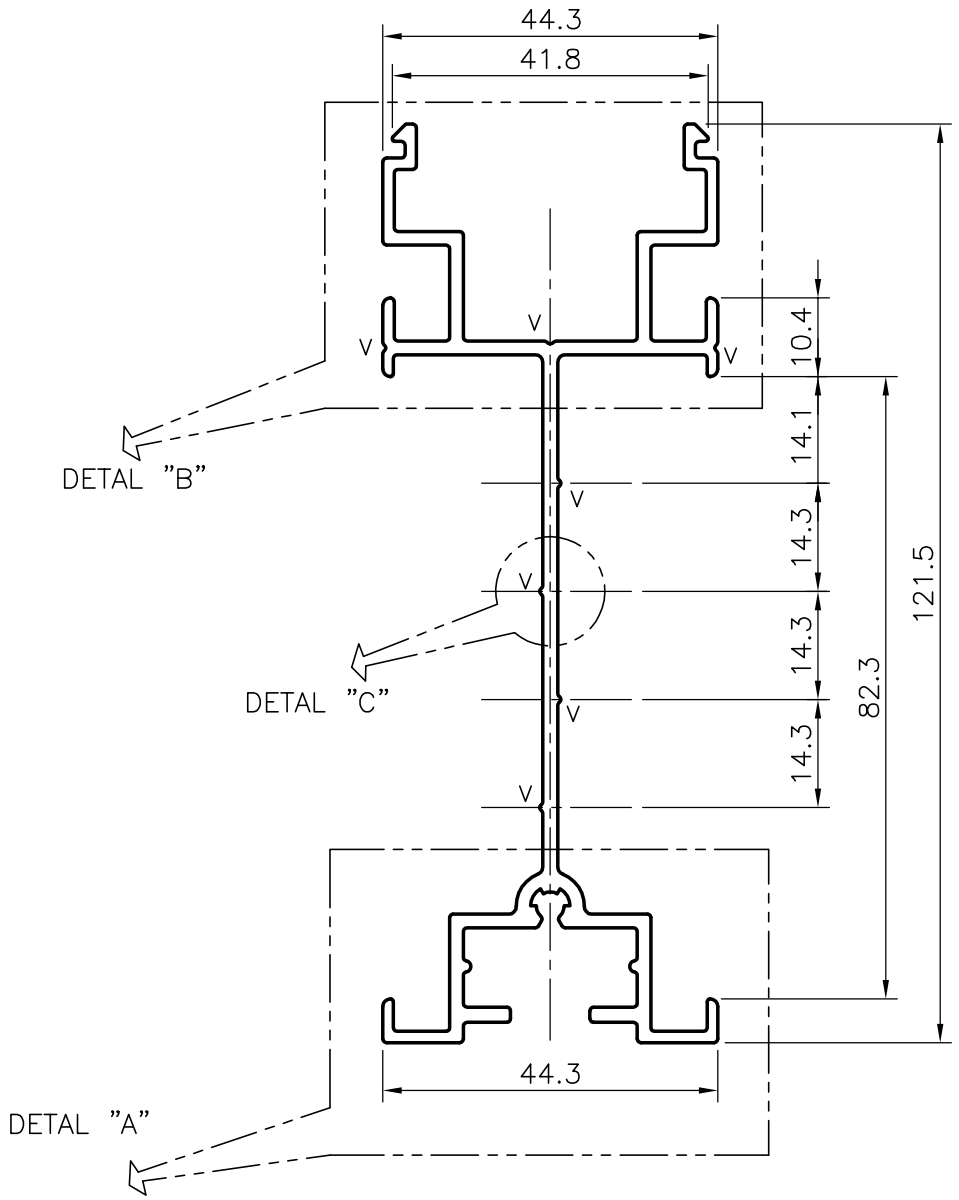

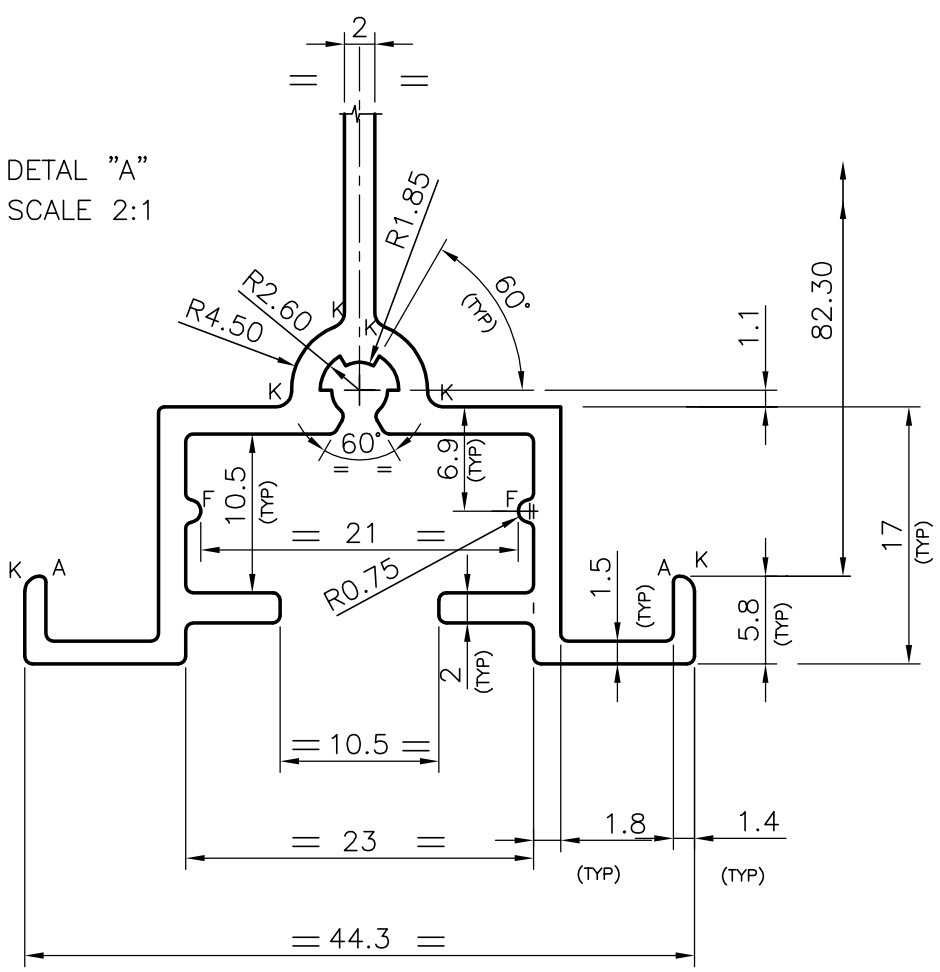

V = ROUND GROOVE (7 PLACES)
F = FULL RADII (2 PLACES)
K = R1 (12 PLACES)
C = R0.35 (2 PLACES)
A = R0.40 (4 PLACES)

22225
7132
X202
P-3461

SYMBOL OF QUALITY
AN ISO 9002 COMPANY

JINDAL ALUMINIUM LTD.
BANGALORE-560073 (INDIA)

1. ALL DIMENSIONS ARE IN mm.
2. ROUND OFF ALL SHARP CORNERS WITH 0.40 mm.
3. TOLERANCES WILL BE AS PER I.S 3965-1981 UNLESS OTHERWISE SPECIFIED

			NAME	DATE
		DRAWN	RAGHAVENDRA	28-07-01
		CHECKED		
		APPROVED		
		SCALE	2:1 & 1:1	
PARTY'S NAME	HARMONY SYSTEMS ,. DELHI	WEIGHT kg/m	1.553	
PARTY'S DRAWING No.	AS PER DRAWING	PERIMETER	629.86mm	
ALLOY & TEMPER	HE9 WP	SECTION No.	22225	
DESCRIPTION	–	DRAWING No.	22225	