S510 (2)	
8258	
22292	
–	

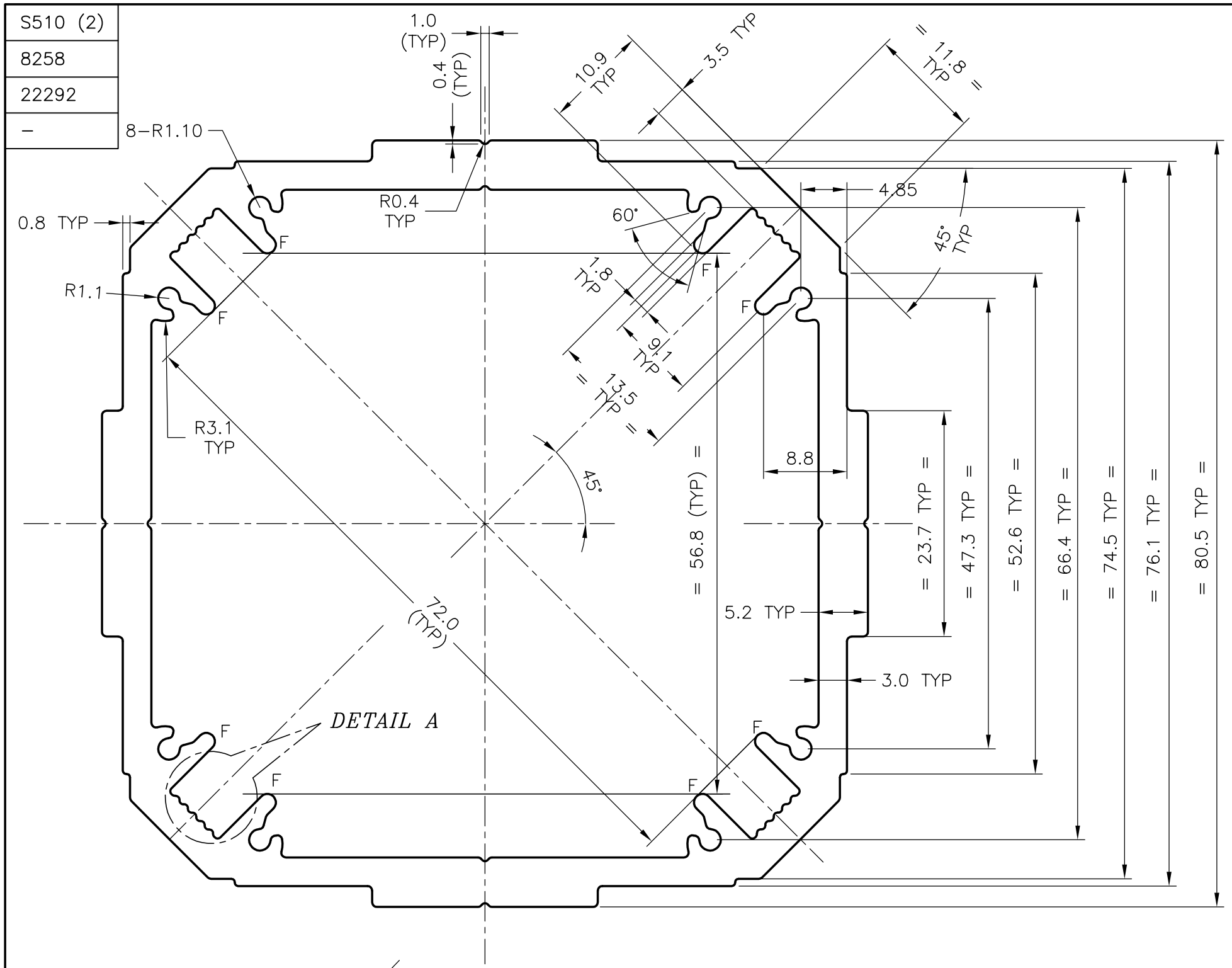

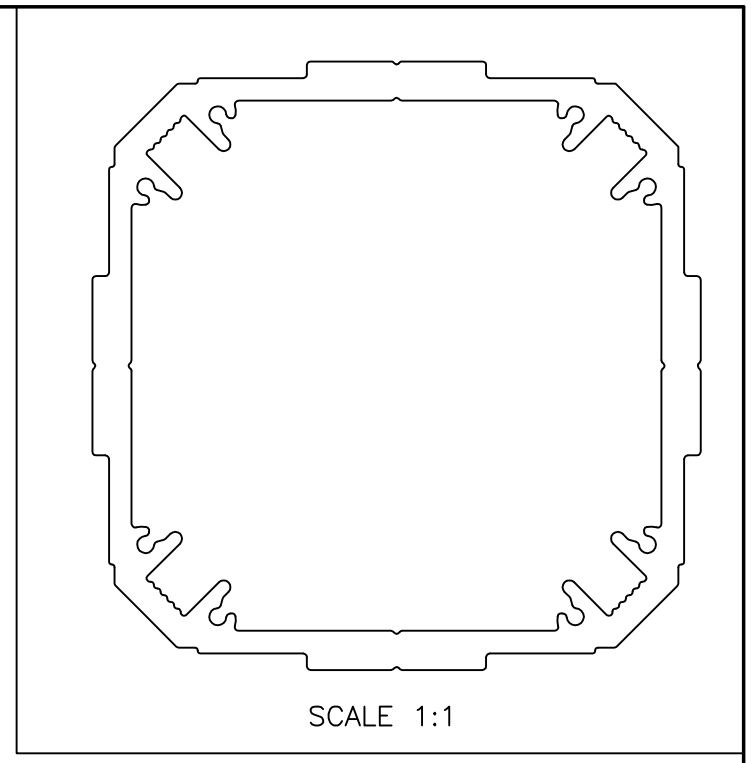

NOTE:

1.F=RADII FULL (8-PLCS)

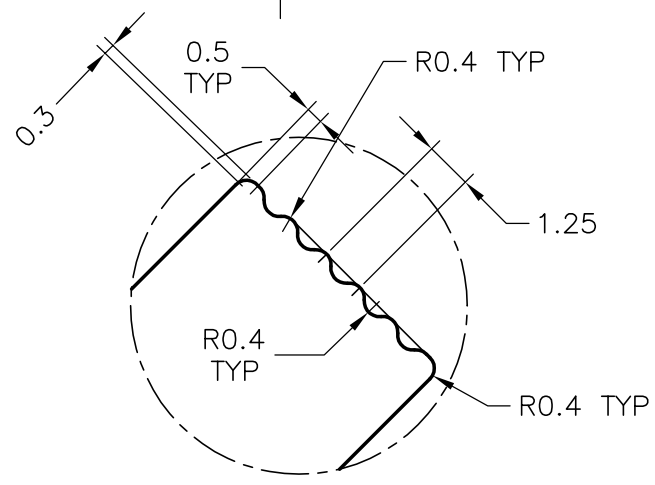

DETAIL A
SCALE 5:1

JINDAL SYMBOL OF QUALITY AN ISO 9002 COMPANY	*JINDAL ALUMINIUM LTD.* *BANGALORE-560073 (INDIA)*		NAME	DATE
		DRAWN	RANGASWAMY	14-02-01
1. ALL DIMENSIONS ARE IN mm. 2. ROUND OFF ALL SHARP CORNERS WITH 0.50 mm. 3. TOLERANCES WILL BE AS PER IS:6477-1983 UNLESS OTHERWISE SPECIFIED		CHECKED		
		APPROVED		
		SCALE	2:1,5:1 &1:1	
PARTY'S NAME	21st CENTURY OFFICES PVT LTD, BANGALORE	WEIGHT kg/m	3.194	
PARTY'S DRAWING No.	10201308	SECTION No.	22292	
ALLOY & TEMPER	HE9 WP	DRAWING No. 22292		
DESCRIPTION	POST			