P–4061–2
8292
22305

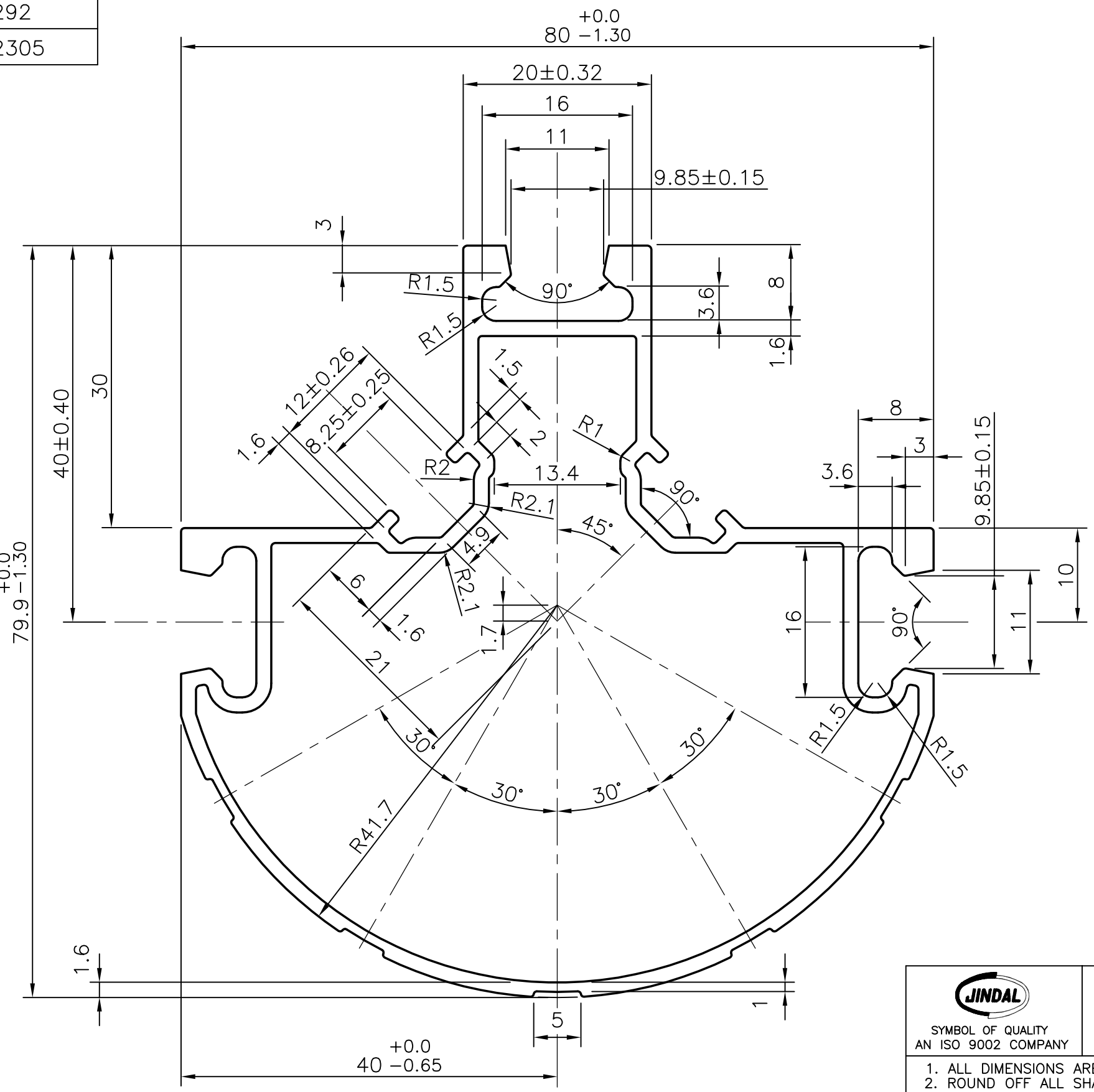

TOLERANCE ON THICKNESS			DIMENSIONAL TOLERANCES		
OVER	UP TO & INCLUDING	TOLERANCES	OVER	UP TO & INCLUDING	TOLERANCES
mm.	mm.	±mm.	mm.	mm.	±mm.
–	18	0.20	–	3	0.16
18	30	0.26	3	10	0.20
30	60	0.32	10	18	0.26
60	80	0.36	18	30	0.32
80	120	0.41	30	40	0.40
			40	60	0.45
			60	80	0.50
			80	100	0.65

1. UNSPECIFIED GENERAL WALL THICKNESS:– 1.60 mm.
2. MATCHING SECTION:– 8175 & 8176

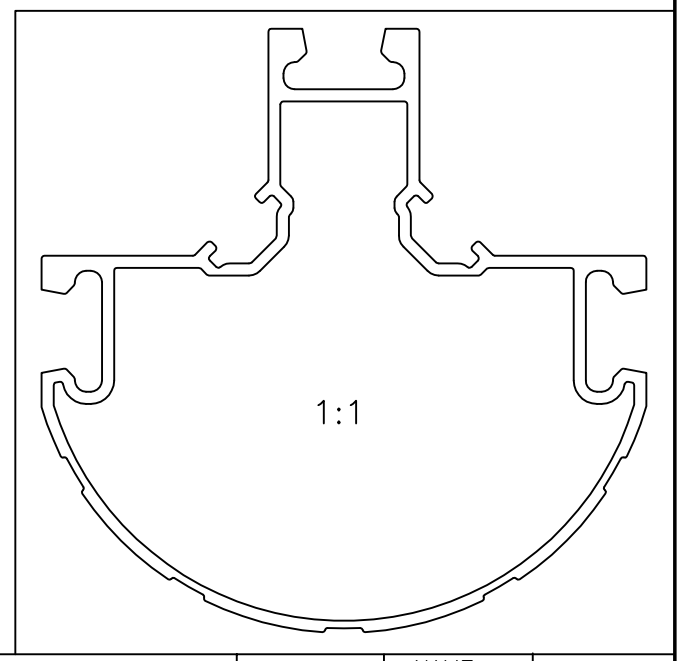

JINDAL
SYMBOL OF QUALITY
AN ISO 9002 COMPANY

JINDAL ALUMINIUM LTD.
BANGALORE–560073 (INDIA)

1. ALL DIMENSIONS ARE IN mm.
2. ROUND OFF ALL SHARP CORNERS WITH 0.40 mm.
3. TOLERANCES WILL BE AS PER BS: 1474–1985 UNLESS OTHERWISE SPECIFIED

		NAME	DATE
DRAWN		R.D.Sharma	03–02–03
CHECKED			
APPROVED			
SCALE		1:1 & 2:1	
AREA mm²		550.7	
PERIMETER mm.		377.4	
WEIGHT kg/m		1.487	
SECTION No.		22305	
DRAWING No.		22305	

PARTY'S NAME	HI–TECH CONTRACTS, U.K.
PARTY'S DRAWING No.	090 (ISSUE–2)
ALLOY & TEMPER	6063 T6
DESCRIPTION	–