P–5034
S1287
22382

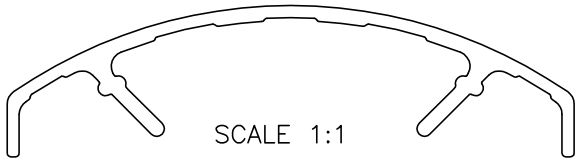

R = 2mm RADIUS (8 PLACES)
F = FULL RADIUS (2 PLACES)

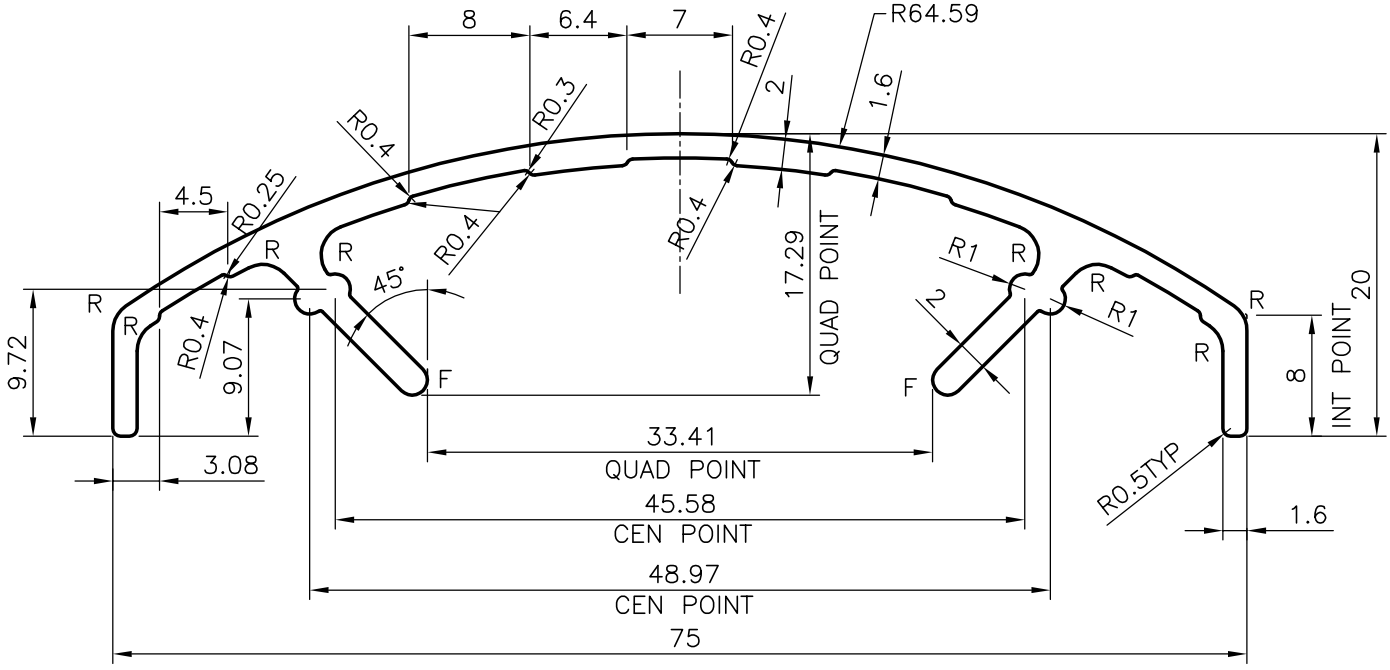

			NAME	DATE
JINDAL SYMBOL OF QUALITY AN ISO 9002 COMPANY	*JINDAL ALUMINIUM LTD.* *BANGALORE–560073 (INDIA)*	DRAWN	RAGHAVENDRA	19–08–2004
		CHECKED		
		APPROVED		

1. ALL DIMENSIONS ARE IN mm.
2. ROUND OFF ALL SHARP CORNERS WITH 0.40 mm.
3. TOLERANCES WILL BE AS PER IS:3965–1981 UNLESS OTHERWISE SPECIFIED

SCALE	2:1
AREA mm^2	227.63
PERIMETER mm.	237.577
WEIGHT kg/m	0.615

PARTY'S NAME	BIR METAL SYSTEMS, BANGALORE
PARTY'S DRAWING No.	BMS9010/A
ALLOY & TEMPER	HE9 WP
DESCRIPTION	FURNITURE SECTION

DRAWING No.	SECTION No.
P–5034	–
S1287	S1287
22382	22382