P–5637
X409
22406

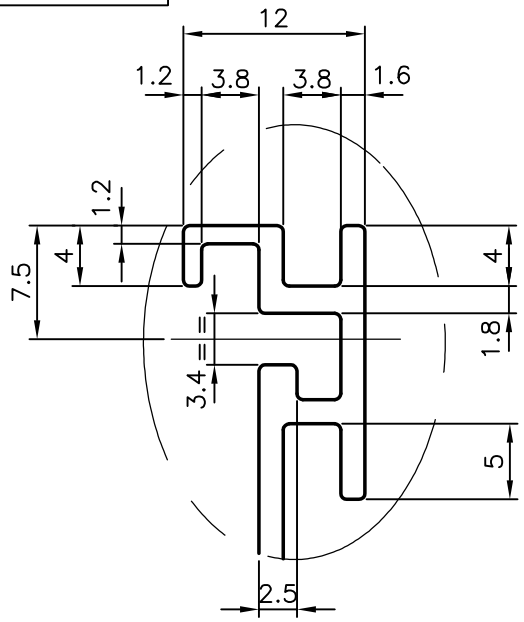

DETAIL–A
SCALE:–2:1

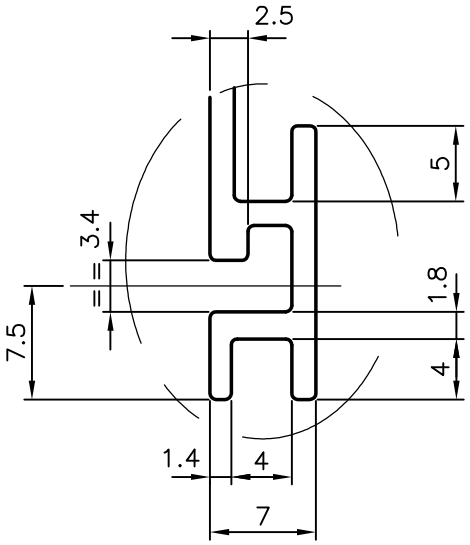

DETAIL–B
SCALE:–2:1

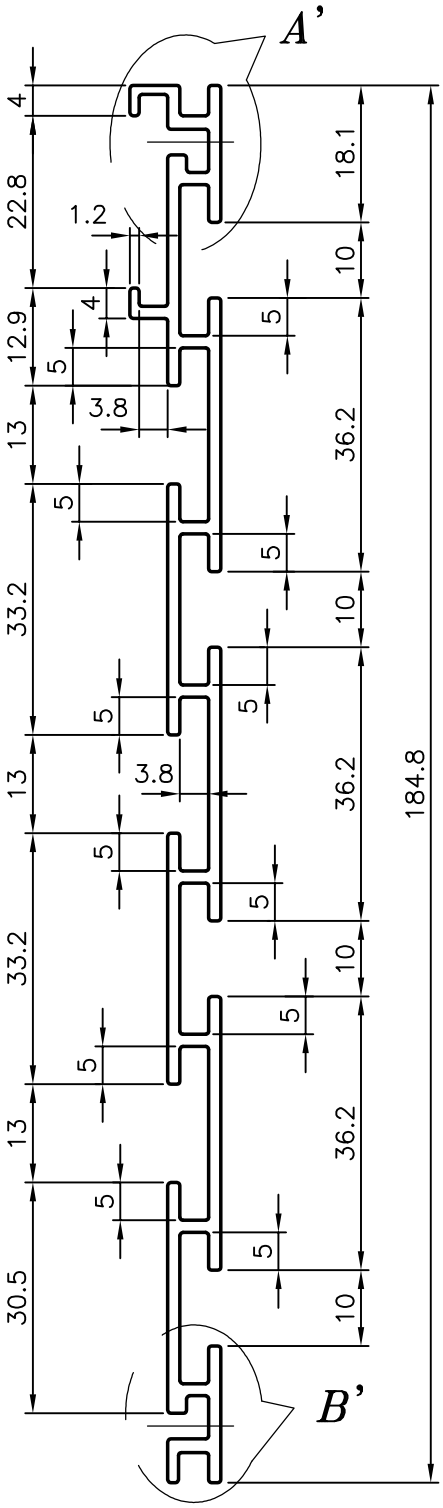

GENERAL WALL THICKNESS = 1.6 mm

JINDAL SYMBOL OF QUALITY AN ISO 9002 COMPANY	*JINDAL ALUMINIUM LTD.* *BANGALORE–560073 (INDIA)*		NAME	DATE
		DRAWN	MALINGAPPA	06–07–2005
		CHECKED		
		APPROVED		
1. ALL DIMENSIONS ARE IN mm. 2. ROUND OFF ALL SHARP CORNERS WITH 0.50 mm. 3. TOLERANCES WILL BE AS PER IS:3965–1981 UNLESS OTHERWISE SPECIFIED		SCALE		1:1
		AREA mm^2		540.323
		PERIMETER mm.		661.749
PARTY'S NAME	WIPRO CONSUMER CARE & LIGHTING, BANGALORE	WEIGHT kg/m		1.459
		DRAWING No.		SECTION No.
PARTY'S DRAWING No.	STR D 0029 (REV. NO. 0)	P–5637		–
		X409		X409
ALLOY & TEMPER	HE9 WP	22406		22406
DESCRIPTION	FURNITURE SECTION–ACCESSORY RAIL			