P-5709-2
X449
22423

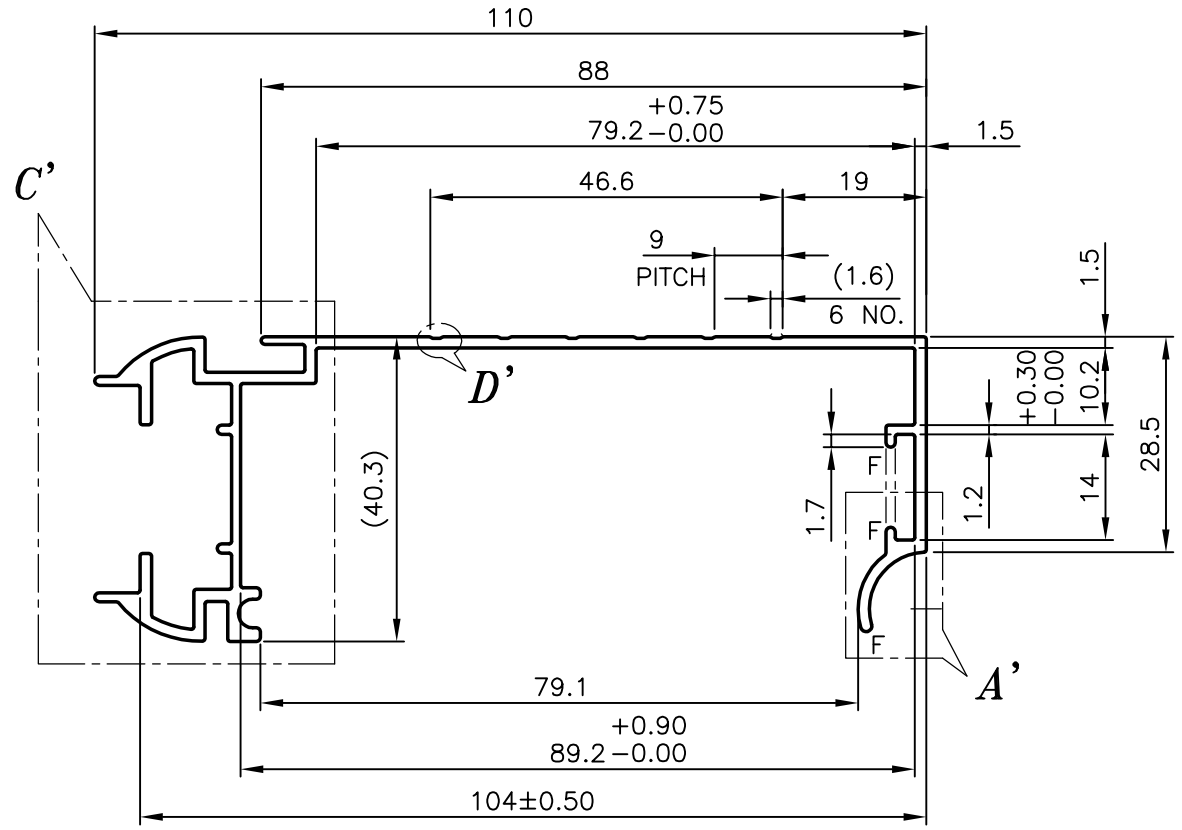

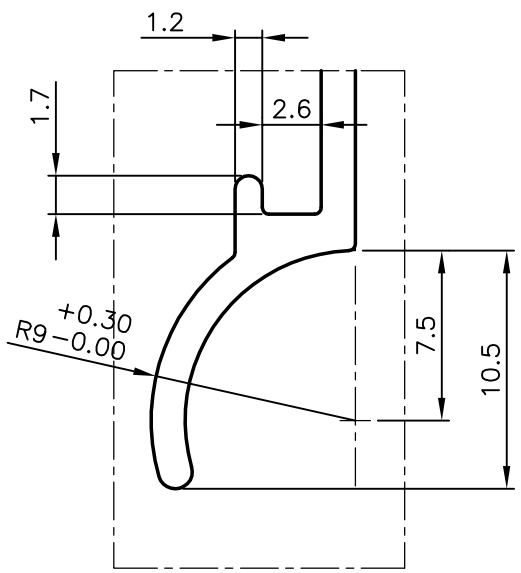

DETAIL−A
SCALE:−3:1

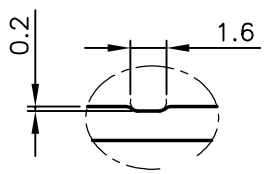

DETAIL−D
SCALE:−3:1

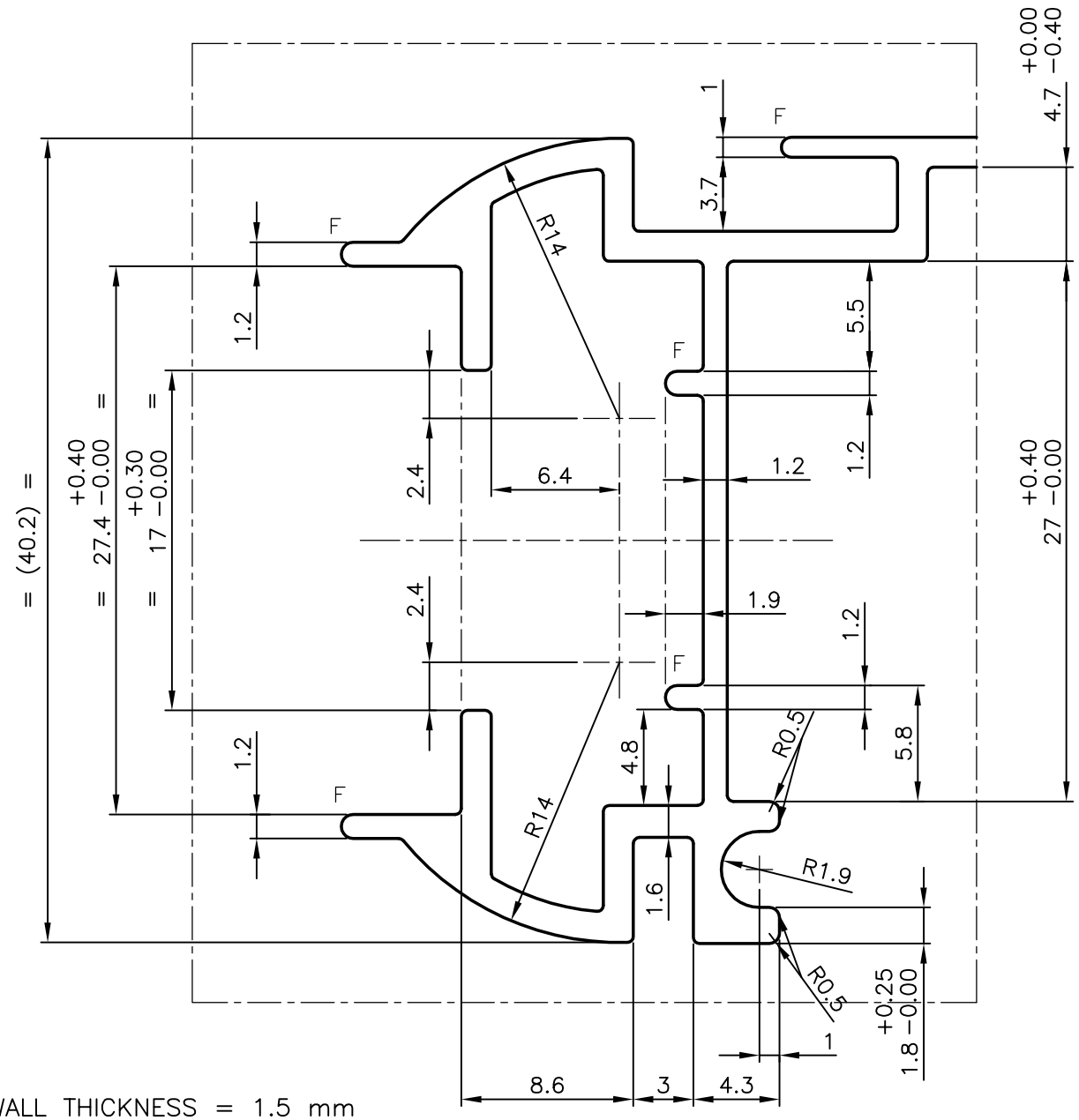

DETAIL−C
SCALE:−3:1

GENERAL WALL THICKNESS = 1.5 mm
F = FULL RADIUS (8 PLACES)
ANGULAR TOLERANCE:− ±1°
TWIST & BEND:− 1.70 mm./M
UNSPECIFIED CORNER RADIUS = 0.30 mm

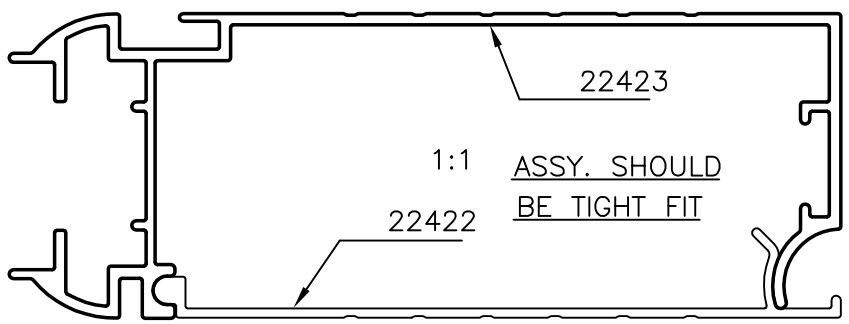

JINDAL SYMBOL OF QUALITY AN ISO 9001 COMPANY	*JINDAL ALUMINIUM LTD.* *BANGALORE−560073 (INDIA)*		NAME	DATE
		DRAWN	MALINGAPPA	30−09−2005
		CHECKED		
		APPROVED		
1. ALL DIMENSIONS ARE IN mm. 2. ROUND OFF ALL SHARP CORNERS WITH 0.40 mm. 3. TOLERANCES WILL BE AS PER DIN: 17615 PART−3 UNLESS OTHERWISE SPECIFIED		SCALE		1:1
		AREA mm²		378.776
		PERIMETER mm.		504.771
		WEIGHT kg/m		1.024
PARTY'S NAME	GODREJ & BOYCE MFG. CO. LTD., BOMBAY	DRAWING No.		SECTION No.
PARTY'S DRAWING No.	PL4−A3−4063 REV. A	P−5709−2		−
ALLOY & TEMPER	HE9 WP	X449		X449
		22423		22423
DESCRIPTION	CABLE CHANNEL (B) DORIC			