P–8160
X869
22500

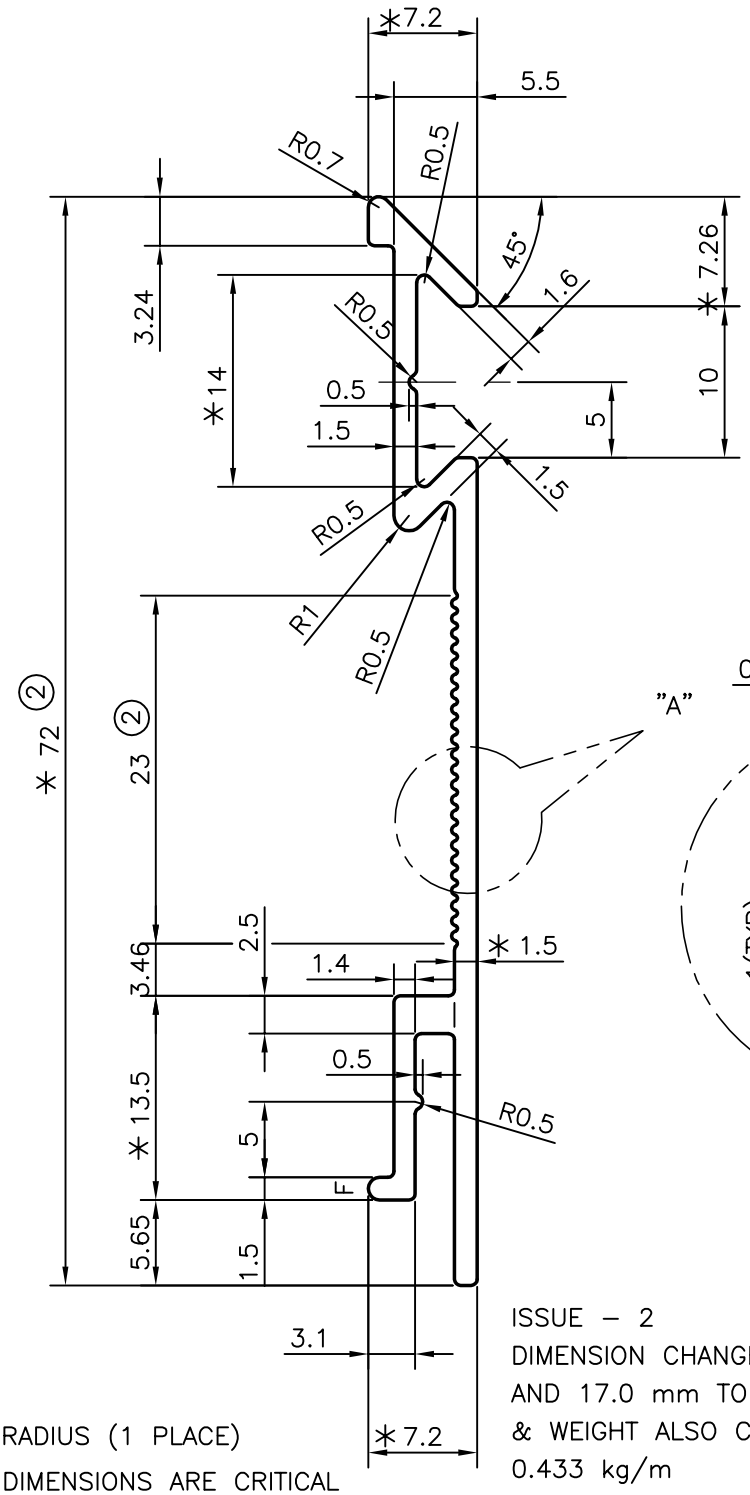

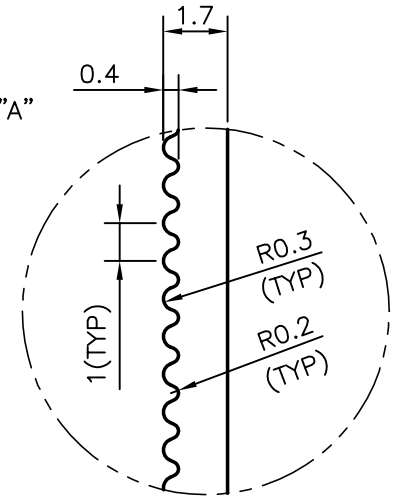

DETAIL OF "A"
SCALE 5:1

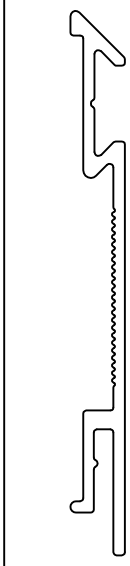

SCALE 1:1

ISSUE – 2
DIMENSION CHANGED FROM 66.0 mm TO 72.0 mm, AND 17.0 mm TO 23.0 mm,
& WEIGHT ALSO CHANGED FROM 0.407 kg/m TO 0.433 kg/m

F = FULL RADIUS (1 PLACE)
* MARKED DIMENSIONS ARE CRITICAL

			NAME	DATE
JINDAL SYMBOL OF QUALITY AN ISO 9001 COMPANY	*JINDAL ALUMINIUM LTD.* *BANGALORE–560073 (INDIA)*	DRAWN	PRASANNA.H	14–05–2008
		CHECKED		
		APPROVED		

1. ALL DIMENSIONS ARE IN mm.
2. ROUND OFF ALL SHARP CORNERS WITH 0.40 mm.
3. TOLERANCES WILL BE AS PER IS:3965–1981 UNLESS OTHERWISE SPECIFIED

SCALE	2:1
AREA mm^2	160.483
PERIMETER mm.	209.744
WEIGHT kg/m	0.433 ②

PARTY'S NAME	TESCO TRADING & CONTRACTS, BANGALORE
PARTY'S DRAWING No.	TTC/ALU/SKT72 mm
ALLOY & TEMPER	6063 T6
DESCRIPTION	MISC. SECTION

DRAWING No.	SECTION No.
P–8160	–
X869	X869–ISSUE–2
22500	22500