P–2079
4813
22513

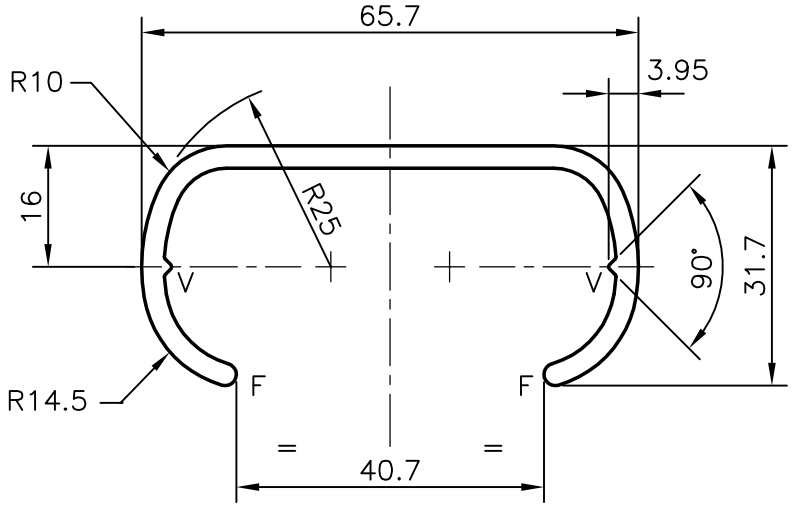

GENERAL WALL THICKNESS :– 2.95 mm.

F = FULL RADIUS (2)

JINDAL ALUMINIUM LTD. BANGALORE–560073			NAME	DATE
		DRAWN	D.SRIVASTAVA	08–09–98
1. ALL DIMENSIONS ARE IN mm. 2. ROUND OFF ALL SHARP CORNERS WITH 0.4 mm. 3. TOLERANCES WILL BE AS PER IS: 3965–1981 ,UNLESS OTHERWISE SPECIFIED		CHECKED		
		APPROVED		
PARTY'S NAME	GENERAL CATEGORY	SCALE	1:1	
PARTY'S DRAWING No.	NIL	WEIGHT kg/m	0.976	
ALLOY & TEMPER	HE30 WP	SECTION No.	22513	
LENGTH	6096 mm.	DRAWING No.		
DESCRIPTION	LADDER SECTION	22513		