| |
|---|
| 4539 |
| 10630 |
| 22702 |

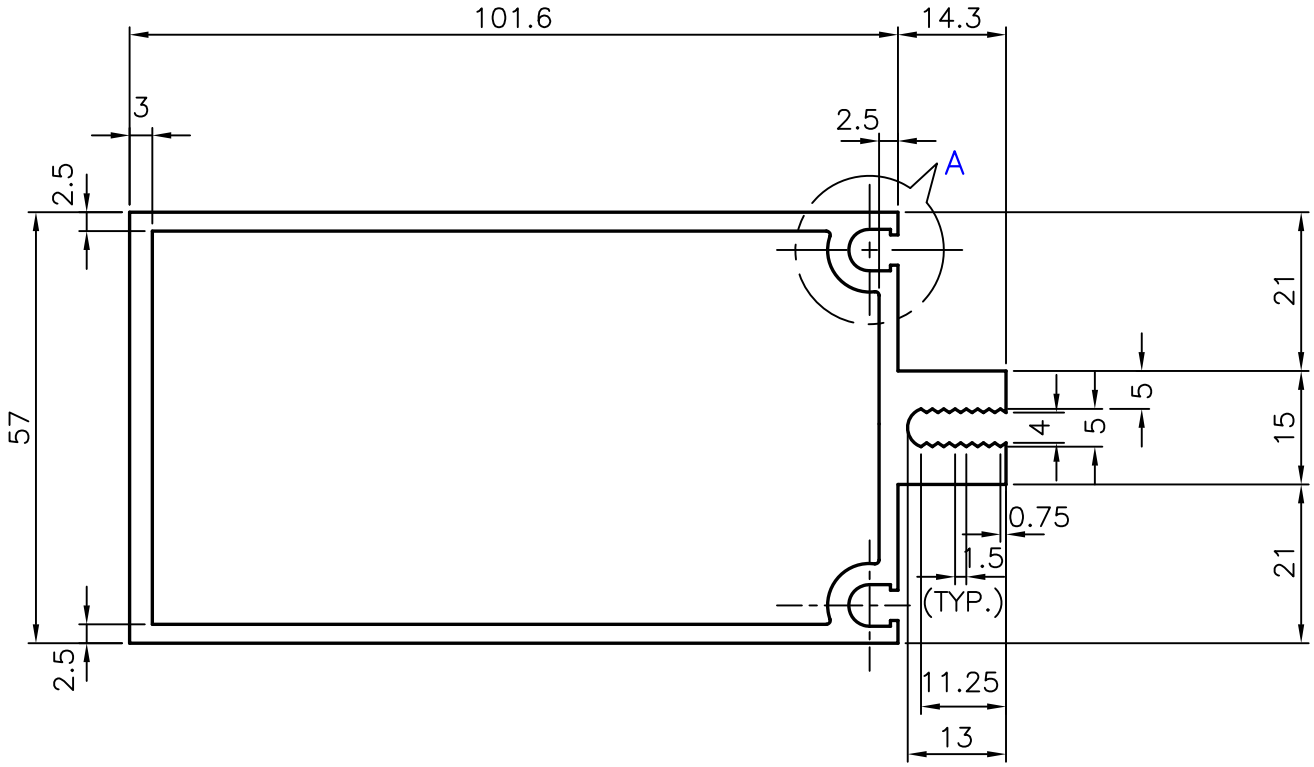


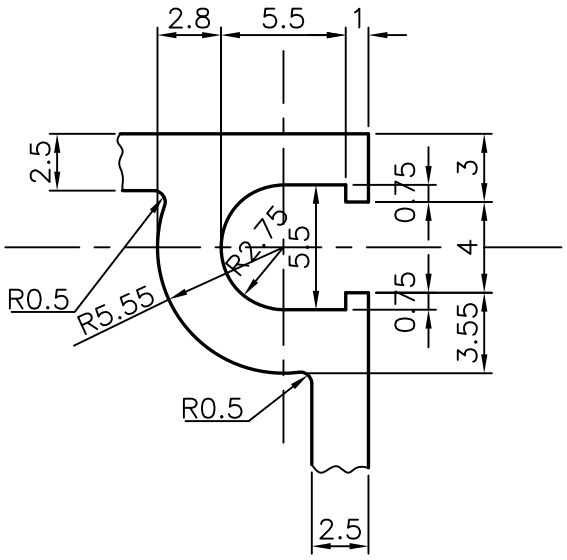


DETAIL AT 'A'
SCALE 3:1

NOTE:–

1. DIMENSIONS ARE IN MM.
2. ROUND OFF SHARP CORNERS WITH 0.4R.
3. TOLERANCE ARE AS PER I.S. 3965–1981.

| | | | | | | |
|---|---|---|---|---|---|---|
| JINDAL SYMBOL OF QUALITY AN ISO 9002 COMPANY | JINDAL ALUMINIUM LTD. BANGALORE–560073 (INDIA) | | | | NAME | DATE |
| | | | | DRAWN | S.P.SHARMA | 16–11–84 |
| 1. ALL DIMENSIONS ARE IN mm 2. ROUND OFF SHARP CORNERS WITH 0.4mm R 3. TOLERANCES WILL BE AS PER IS : 3965–1981 | | | | CHECKED | | |
| | | | | APPROVED | | |
| PARTY'S NAME | E.C.I.E PVT. LTD., BANGALORE | | | SCALE | 1:1 & 3:1 | |
| | | | | WEIGHT kg/m | 2.664 | |
| PARTY'S DRAWING No. | – | FINISH | AS EXTRUDED | SECTION No. | ~~4539~~ 22702 | |
| ALLOY & TEMPER | HE 9 WP | LENGTH: | AS REQUIRED | DRAWING No. | ~~4539~~ 22702 | |
| DESCRIPTION | DOOR SECTION | | | | | |