P–4555
2991
22730

GENERAL WALL THICKNESS = 1.4 mm

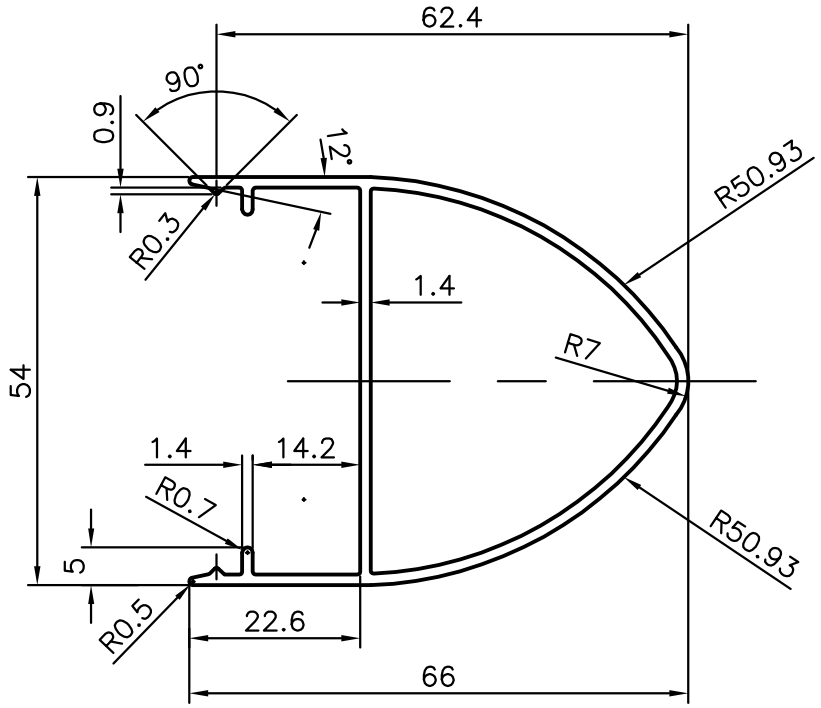

			NAME	DATE
JINDAL SYMBOL OF QUALITY AN ISO 9001 COMPANY	*JINDAL ALUMINIUM LTD.* *BANGALORE–560073 (INDIA)*	DRAWN	MALINGAPPA	04–11–2003
		CHECKED		
		APPROVED		

1. ALL DIMENSIONS ARE IN mm.
2. ROUND OFF ALL SHARP CORNERS WITH 0.40 mm.
3. TOLERANCES WILL BE AS PER BS:1474–1987 UNLESS OTHERWISE SPECIFIED

SCALE	1:1
AREA mm^2	303.8
PERIMETER mm.	264.9
WEIGHT kg/m	0.820

		DRAWING No.	SECTION No.
PARTY'S NAME	DIPLOMAT SYSTEMS LTD.		
PARTY'S DRAWING No.	CW 2160	P–4555	–
ALLOY & TEMPER	HE9 WP	2991	2991
DESCRIPTION	CURTAIN WALL SECTION	22730	22730