P-3745
S846
14662
22745

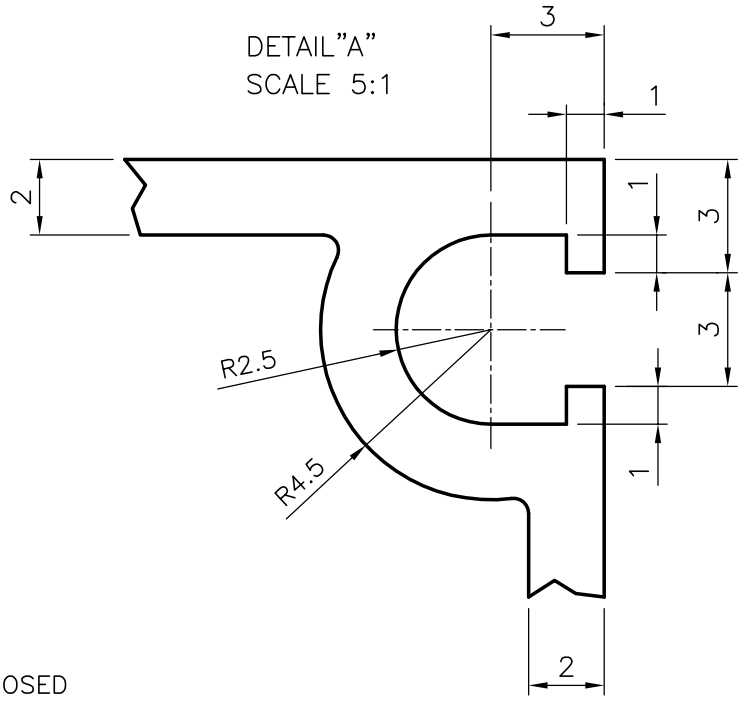

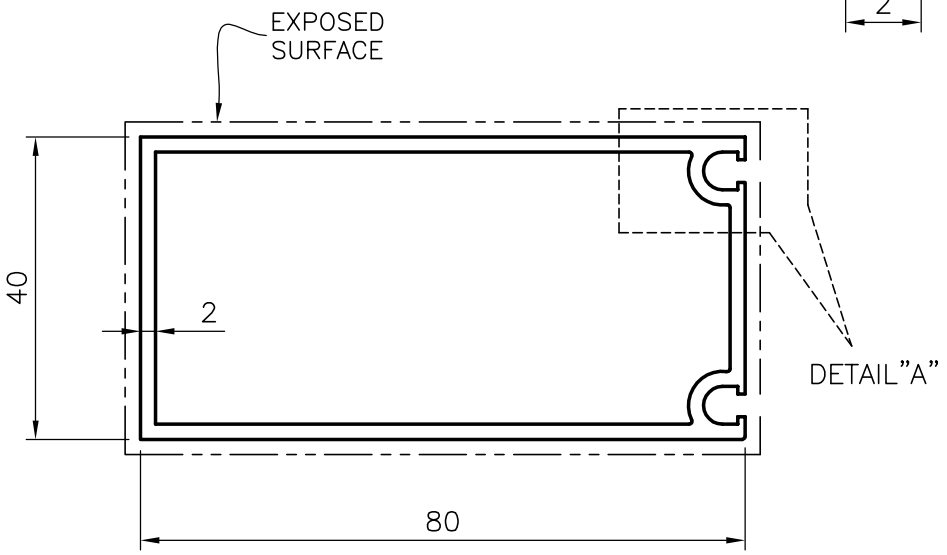

GENERAL WALL THICKNESS = 2.00mm

JINDAL SYMBOL OF QUALITY AN ISO 9002 COMPANY	*JINDAL ALUMINIUM LTD.* *BANGALORE-560073 (INDIA)*		NAME	DATE
		DRAWN	RAGHAVENDRA	12-01-02
		CHECKED		
		APPROVED		
1. ALL DIMENSIONS ARE IN mm. 2. ROUND OFF ALL SHARP CORNERS WITH 0.40 mm. 3. TOLERANCES WILL BE AS PER IS 6477-1983 UNLESS OTHERWISE SPECIFIED		SCALE	1:1	
		AREA mm^2	485.65	
PARTY'S NAME	SHRI SWASTIK ENGINEERS PVT LTD MUMBAI	PERIMETER	265.54mm	
PARTY'S DRAWING No.	AS PER DRAWING (MJE-3)	WEIGHT kg/m	1.311	
ALLOY & TEMPER	HE9 WP	SECTION No.	22745	
DESCRIPTION	–	DRAWING No.	22745	