P–6150

22772

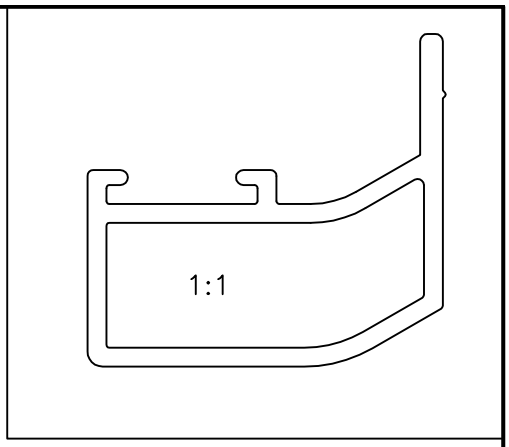

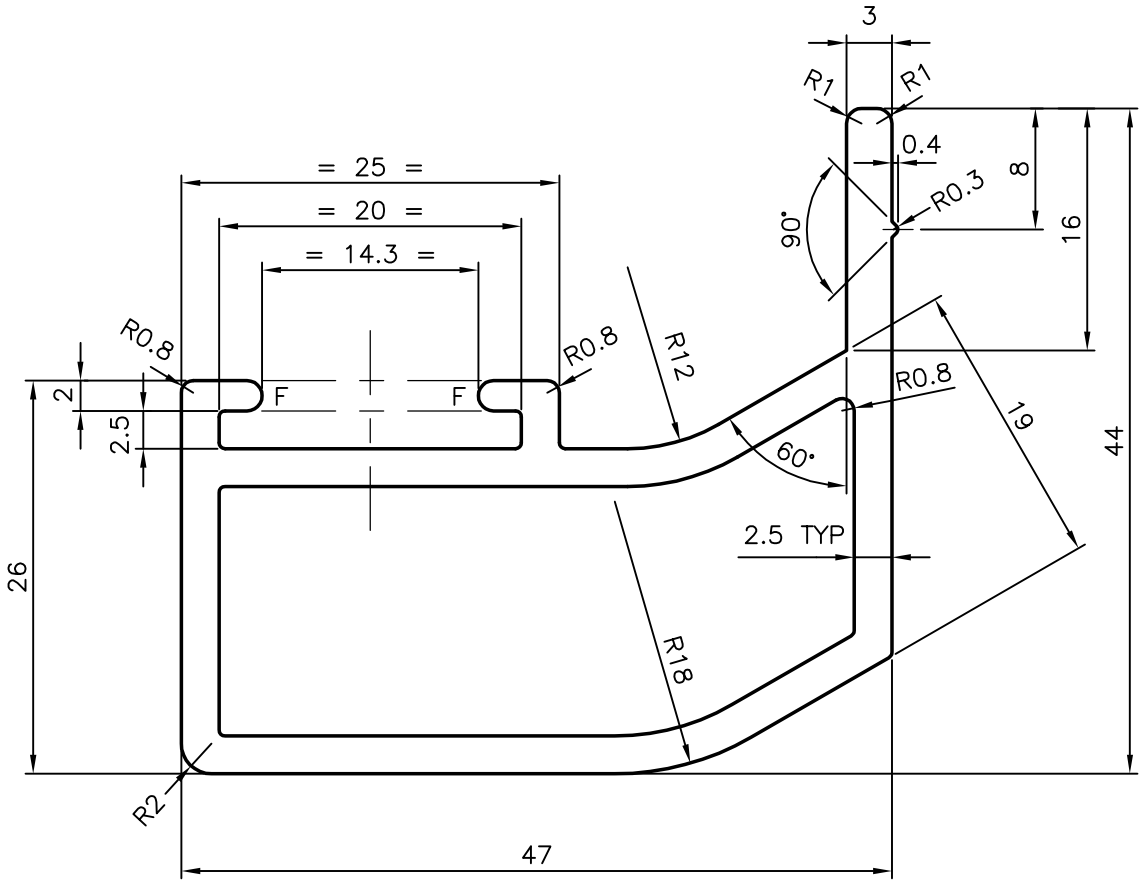

UNSPECIFIED WALL THICKNESS = 2.5 mm

F = FULL RADIUS (2 PLACES)

			NAME	DATE
JINDAL SYMBOL OF QUALITY AN ISO 9001 COMPANY	*JINDAL ALUMINIUM LTD.* *BANGALORE–560073 (INDIA)*	DRAWN	MALINGAPPA	20–01–2006
		CHECKED		
		APPROVED		

1. ALL DIMENSIONS ARE IN mm.
2. ROUND OFF ALL SHARP CORNERS WITH 0.40 mm.
3. TOLERANCES WILL BE AS PER IS:6477–1983 UNLESS OTHERWISE SPECIFIED

SCALE	2:1
AREA mm^2	404.292
PERIMETER mm.	195.852
WEIGHT kg/m	1.092

		DRAWING No.	SECTION No.
PARTY'S NAME	GENERAL CATEGORY BANGALORE, MARKET		
PARTY'S DRAWING No.	AS PER SAMPLE	P–6150	–
ALLOY & TEMPER	HE9 WP	22772	22772
DESCRIPTION	CURTAIN WALL SECTION		