P–6338–2
22781

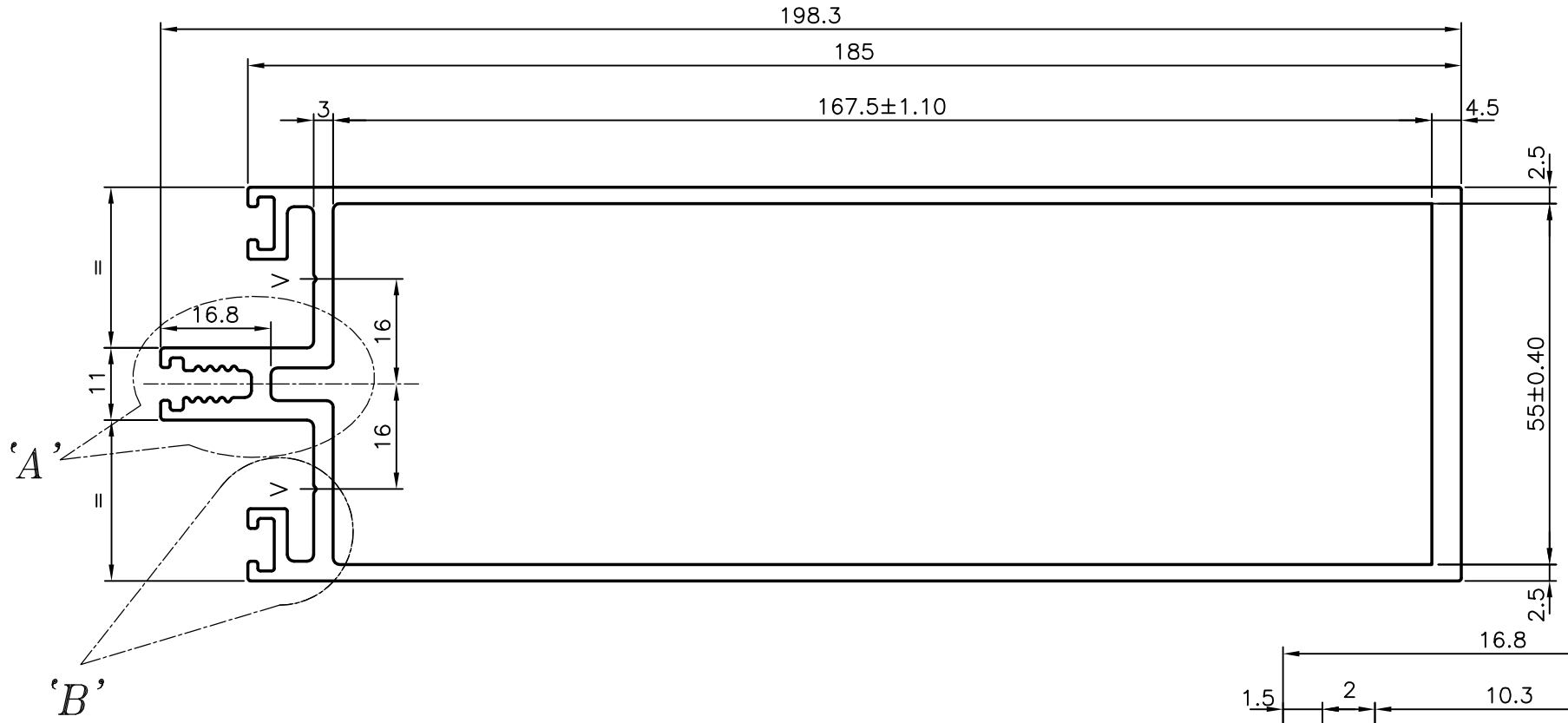

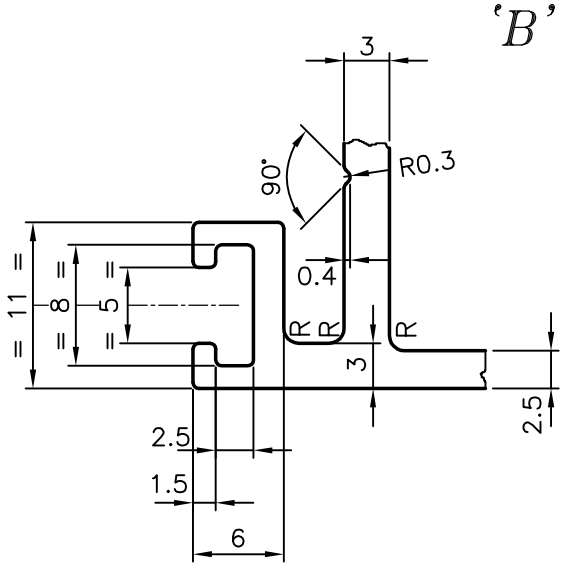

DETAIL:– 'B'
(SCALE – 2:1)

R= R1.0 (14 PLACE)

V= 0.4x90° (2PLACE)

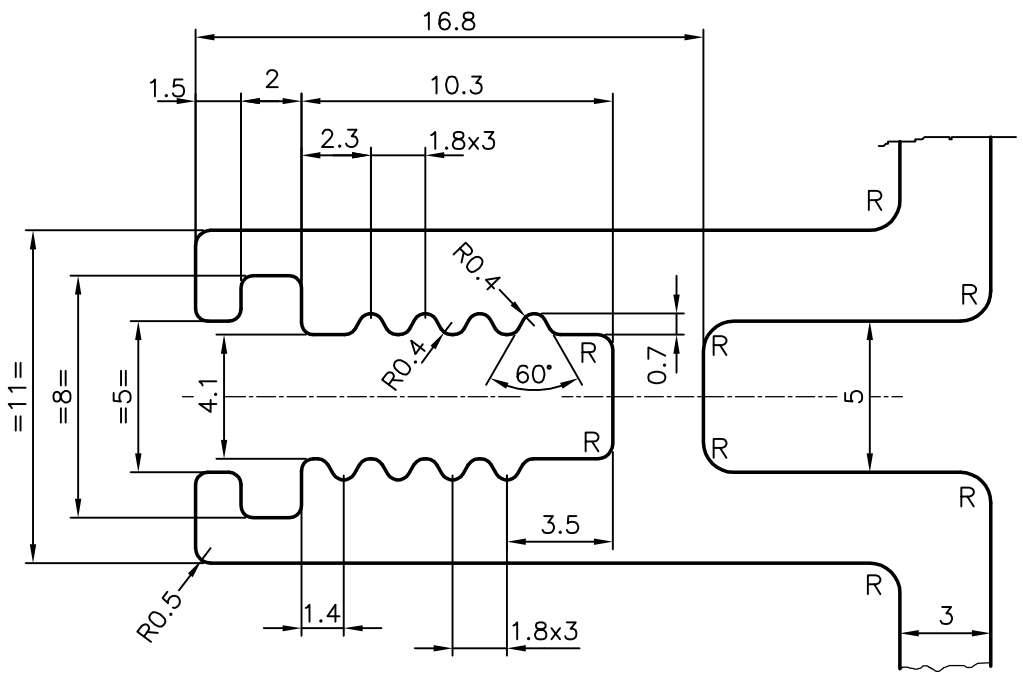

DETAIL:– 'A'
(SCALE – 4:1)

JINDAL SYMBOL OF QUALITY AN ISO 9001 COMPANY	*JINDAL ALUMINIUM LTD.* *BANGALORE–560073 (INDIA)*		NAME	DATE
		DRAWN	J.P.KAUSHIK	11–05–2006
		CHECKED		
		APPROVED		
1. ALL DIMENSIONS ARE IN mm. 2. ROUND OFF ALL SHARP CORNERS WITH 0.40 mm. 3. TOLERANCES WILL BE AS PER IS:6477–1983 UNLESS OTHERWISE SPECIFIED		SCALE		1:1
		AREA mm^2		1527.754
		PERIMETER mm.		646.173
PARTY'S NAME	GENERAL CATEGORY, MUMBAI MARKET	WEIGHT kg/m		4.125
		DRAWING No.		SECTION No.
PARTY'S DRAWING No.	AL–312 REV 2	P–6338–2		–
ALLOY & TEMPER	HE9 WP	22781		22781
DESCRIPTION	CURTAIN WALL SECTION – MULLION			